copiring 4 L 4 UA E-mail:arthur2000@fromru.com

SCHEMATIC DIAGRAM DJ-482C1/C2

Specifications are subject to change without notice or obligation.

	L206	L207	C223	C224
C1	45B	45B	—	—
C2	35B	35B	1pF	1pF

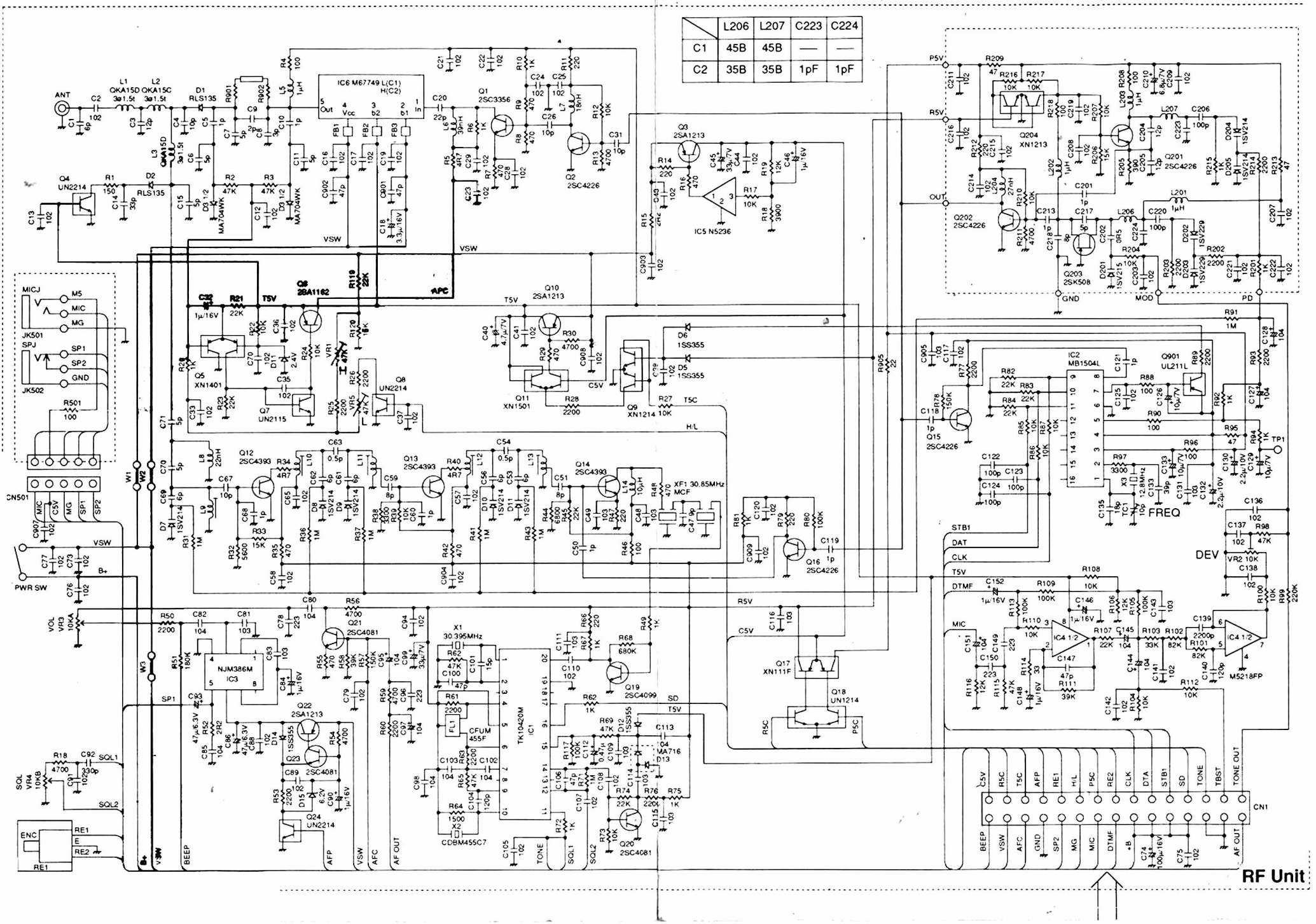

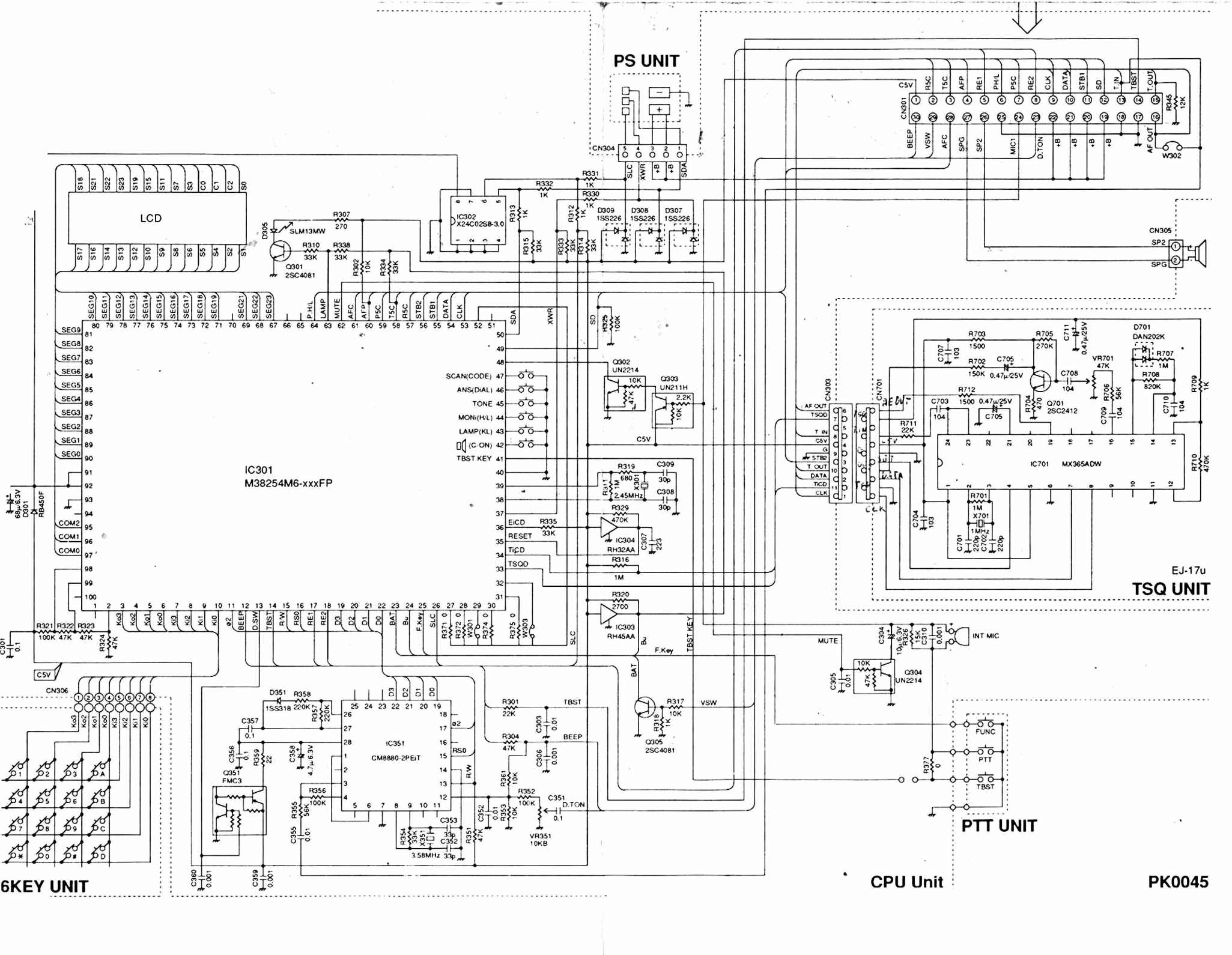
PS UNIT
LCD
IC301
M38254M6-xxxFP
IC302
X24C02S8-3.0
IC351
CM8880-2PEIT
IC701 MX365ADW
TSQ UNIT
EJ-17u
PTT UNIT
6KEY UNIT
CPU Unit
PK0045