Preliminary TOSHIBA Bipolar Linear Integrated Circuit Silicon Monolithic

TA1276AF

PAL/NTSC Video Chroma And Deflection IC For CTV
(normal scan/double scan mode)

TA1276AF provides Video, Chroma and Deflection (sync, when double scan mode) circuit for a PAL/NTSC Color TV, and suitable for a high picture quality, large screen size, wide and/or double scanning TV. These functions are integrated in a 80 pin QPF plastic package.

TA1276AF provides a high-performance video processor in which a YUV double scanning signal can be applied in Video, PAL/NTSC auto-detection circuit in Chroma and 50/60 Hz auto-detection circuit in Sync. PAL demodulation circuit includes Baseband signal processing system. And this demodulation circuit does not required any adjustment.

TA1276AF includes I^2C bus interface, so you can adjust various functions and controls via the bus.

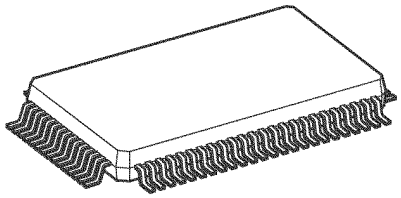

QFP80-P-1420-0.80F

Weight: 1.6 g (typ.)

Features

- Video/chroma section
  - Y delay line
  - Chroma trap
  - IQ demodulation for NTSC, UV demodulation for PAL
- BEP (back end processor) section
  - Enable to process a YUV signal independently
  - Double scanning signal processing capability

  (Y processing section)
    - Black stretcher (controlled by I^2C bus)
    - DC restoration circuit (controlled by I^2C bus)
    - Highbright-color circuit
    - D.L. aperture sharpness circuit + super real transcend circuit (LTI)
    - γ correction (enable to control binary line, gain/start point)
    - Y noise reduction circuit
    - Velocity scan modulation output (the first order differential output and phase/amplitude adjustment)

  (color difference section)
    - Color detail enhancer
    - Selectable relative phase and amplitude
    - Flesh-color restoration
    - Color γ circuit
    - Baseband tint color

  (text section)
    - RGB primary color output
    - On screen display interface
    - Linear RGB interface
    - Fast blanking
    - Drive control
    - AKB (only black level) or cut-off bus control
    - Deflection section
- High performance sync. separation circuit
- Adjustment free H and V oscillation circuit by countdown system
- Horizontal and vertical position adjustment
- Sync separation, HD output
- Horizontal and vertical pulse output in normal mode.

Block Diagram

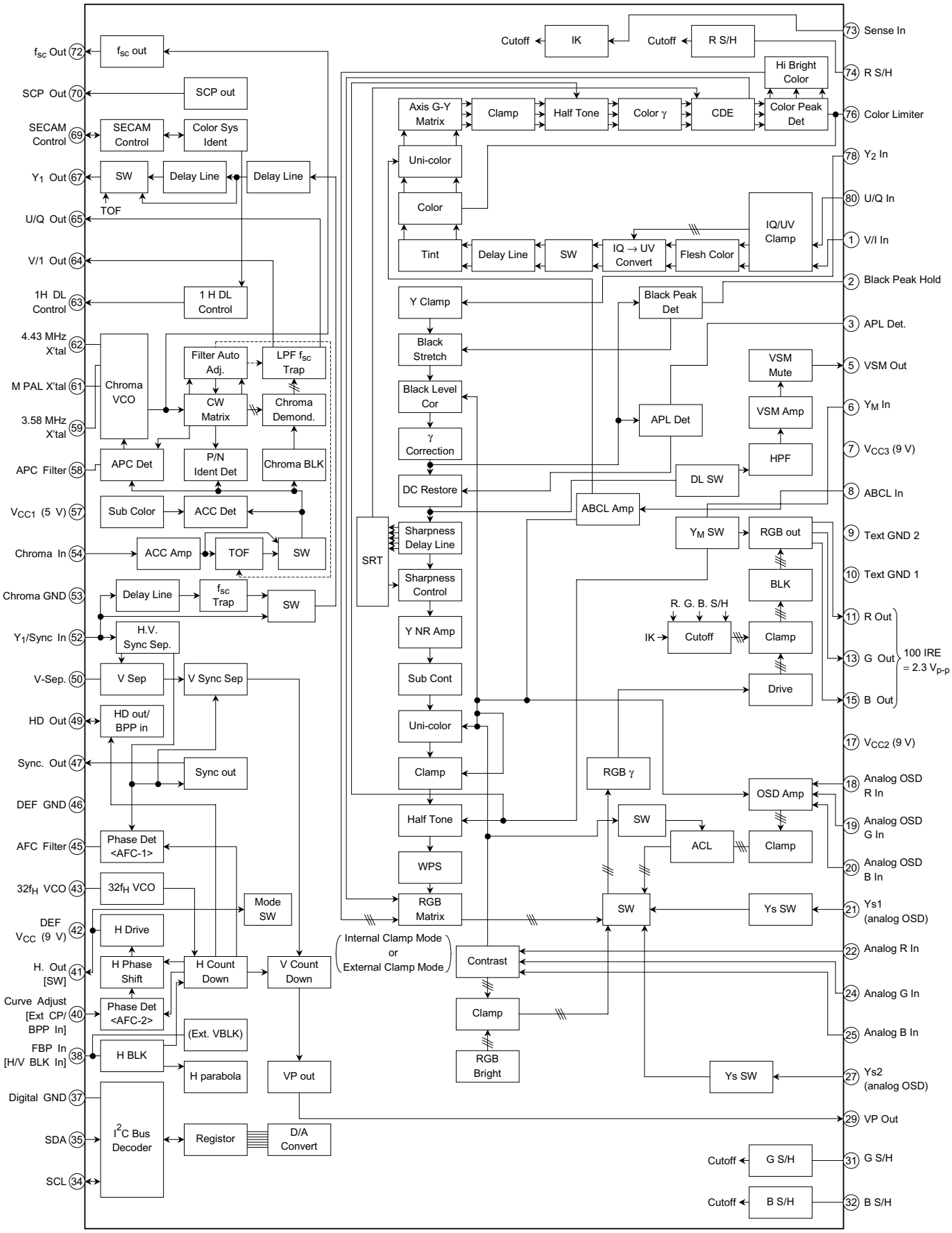

• Pin 41 connect to V_{CC}: Double Scan mode

Note 1: [ ]: for Double Scan mode only (external clamping pulse input mode)

Terminal Functions

Pin No.	Pin Name	Function	Interface Circuit	Input/Output Signal
1 80	V/I input U/Q input	The pin through which R-Y (V)/I and B-Y (U)/Q signals are input. Input via clamp capacitor.	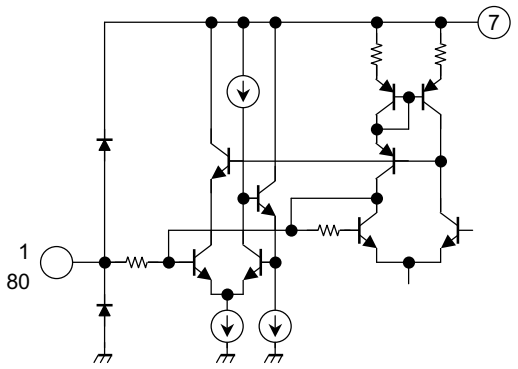	When Burst: Chroma = 1:1 360 mV_{p-p} DC: 5.0 V
2	Black peak hold	Connect the filter controlling the black stretching gain of the black stretching circuit. The black stretching gain varies depending on the voltage at this pin.	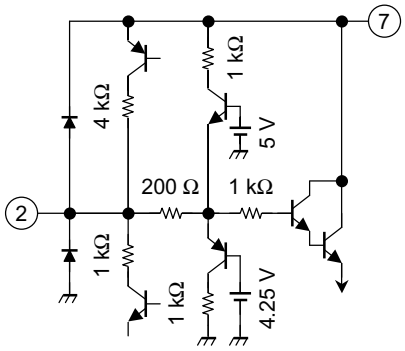	DC
3	APL detection	Connect the filter correcting DC restoration ratio. Opening this pin can monitor the Y-signal that was subjected to black stretching.	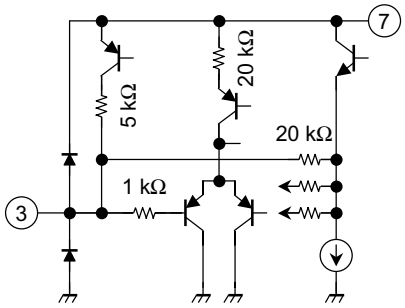	DC
4	NC	None connect PIN. These pins connect to GND.	—	—
5	VSM output	Outputs the Y-signal that routed HPF after it had been subjected to DC restoration. The output is muted with the switches of pins 32 and 36.	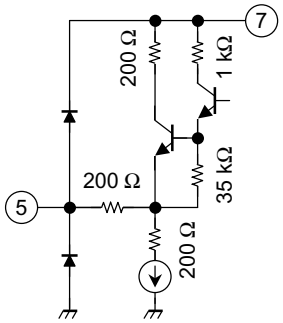	DC 3.5 V

Pin No.	Pin Name	Function	Interface Circuit	Input/Output Signal
6	YM input	The half-tone switch for internal RGB signal. When the voltage at this pin is set to 7.0 V or more, the RGB output voltage.	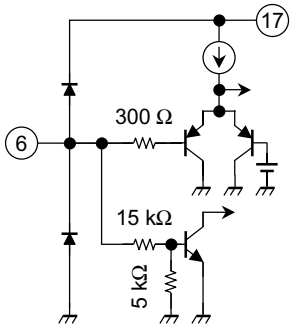	Soft AKB 7.0 V Half Tone 0.75 V TV GND
7	V_{CC3} (9 V)	The V_{CC} pin of picture quality and color difference blocks. Connect 9 V (typ.).	—	—
8	ABCL input	Used to control the external uni-color, brightness, and dynamic ABL. Use this pin when using ABL or ACL. The sensitivity and starting point of the ABL and dynamic ABL can be set by using bus.	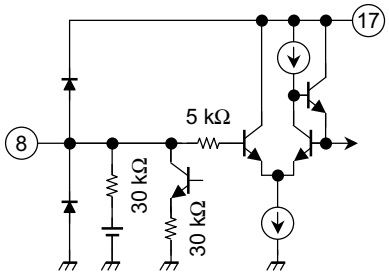	ABCL OFF: 6 V or more
9	TEXT GND 2	The GND pin of TEXT block.	—	—
10	TEXT GND 1	The GND pin of TEXT block.	—	—
11 13 15	R output G output B output	Outputs RGB.	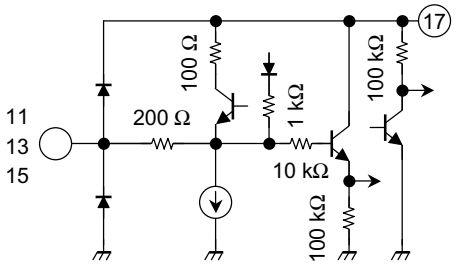	100 IRE: 2.3 V_{p-p} 2.5 V GND At Cont max BRT Cent.
12	NC	None connect PIN. These pins connect to GND.	—	—
14	NC	None connect PIN. These pins connect to GND.	—	—
16	NC	None connect PIN. These pins connect to GND.	—	—
17	V_{CC2} (9 V)	The V_{CC} pin of the text block. Connect 9 V (typ.).	—	—

Pin No.	Pin Name	Function	Interface Circuit	Input/Output Signal
18 19 20	Analog OSD R input Analog OSD G input Analog OSD B input	The pin through which the OSD signal or analog RGB is input. (1) When inputting an OSD signal, input the ODS signal with a voltage of 0 to 5 V (4.1 V or more). (2) When inputting an analog RGB, input the RGB signal via clamp capacitor. ACL works on this input signal only when the entire screen is YS1-HI (the entire screen: OSD).	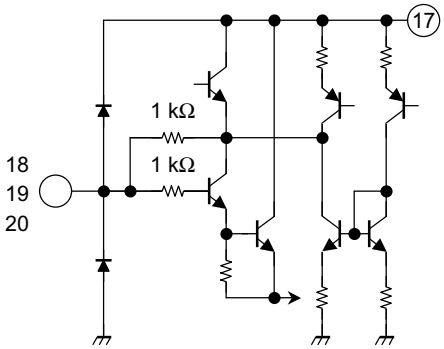	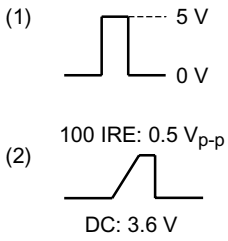
21	YS1	Switches between the internal RGB signal and OSD/analog RGB (pin 18, 19, 20). When this switch is on, the VSM output is muted.	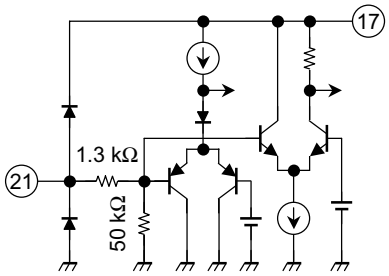	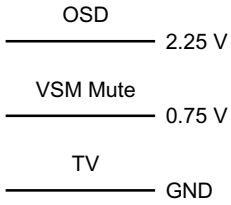
22 24 25	Analog R input Analog G input Analog B input	The pin through which the analog RGB is input. Input the RGB signal via clamp capacitor.	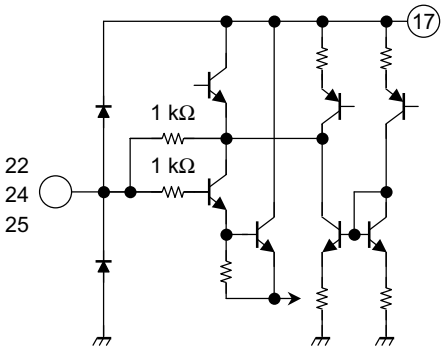	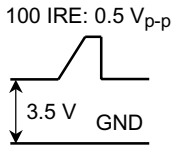
23	NC	None connect PIN. These pins connect to GND.	—	—
26	NC	None connect PIN. These pins connect to GND.	—	—
27	YS2	Switches between the internal RGB signal and analog RGB (pin 33, 34, 35) signal. When this switch is on, the VSM output is muted.	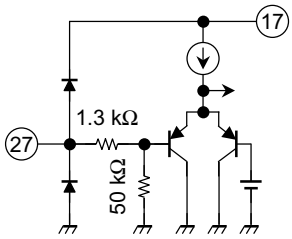	
28	NC	None connect PIN. These pins connect to GND.	—	—

Pin No.	Pin Name	Function	Interface Circuit	Input/Output Signal
29	VP output	Outputs the vertical pulse. This pin also serves as the external blanking input. When current stronger than 350 μA flows, blanking takes place due to the internal blanking and OR logic circuit.	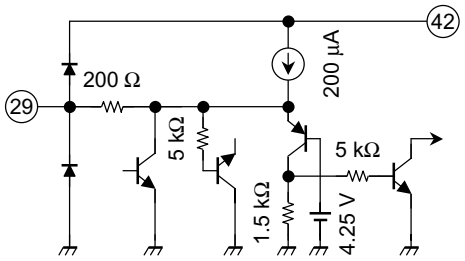	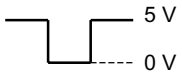
30	NC	None connect PIN. These pins connect to GND.	—	—
31 32	G S/H B S/H	These pins are to be connected with a capacitor for sampling and holding a bais voltage in the AKB operation, of for clamping to set DC voltage of RGB outputs in the no-AKB mode.	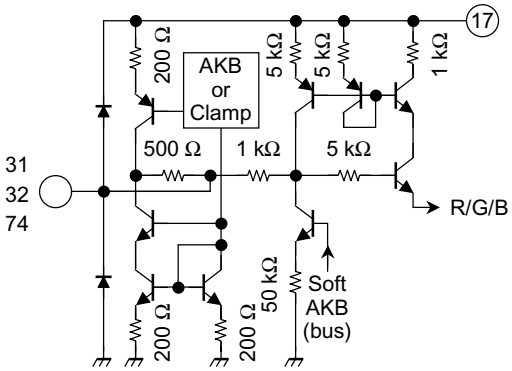	DC
33	NC	None connect PIN. These pins connect to GND.	—	—
34	SCL	The SCL pin of I^2C bus.	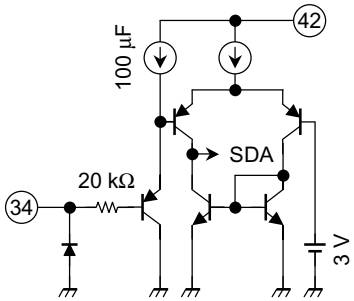	—
35	SDA	The SDA pin of I^2C bus.	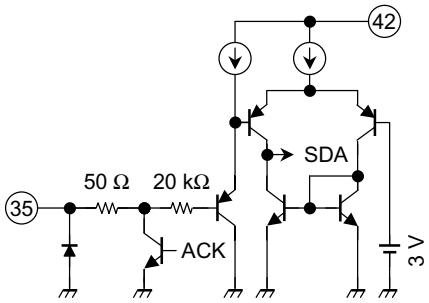	—
36	NC	None connect PIN. These pins connect to GND.	—	—

Pin No.	Pin Name	Function	Interface Circuit	Input/Output Signal
37	Digital GND	The GND pin of I^2L block.	—	—
38	FBP input	The pin through which FBP is input to generate pulses for horizontal AFC2, Y smoothing, and horizontal blanking. When double SCAM mode, input H blanking pulse (5 V or over).	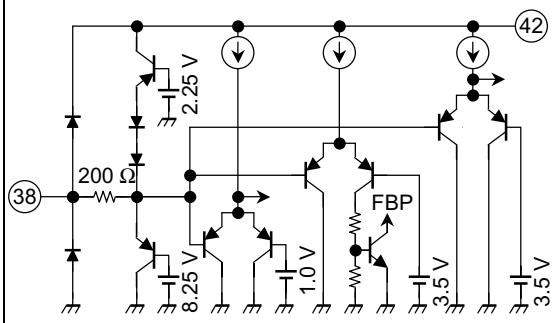	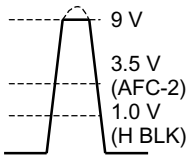
39	NC	None connect PIN. These pins connect to GND.	—	—
40	Curve correction (ext. CP/BPP input)	(1) Used to correct distortion of picture in the case of high-tension fluctuation. Input the AC component of high-tension fluctuation. To disactivate the distortion correction feature, connect a capacitor of 0.01 μF between this pin and GND. (2) Double scan mode This pin is to input external CP (clamping pulse) and BPP (black peak detection stopping pulse).	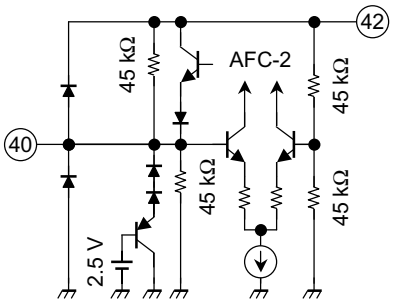	(1) DC 4.5 V (2) 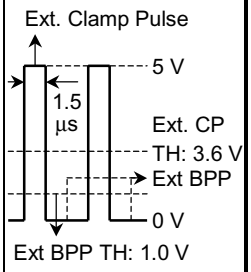
41	Horizontal output (mode SW)	Produces the horizontal output. Connecting the DEF V_{CC} to this pin can swich Double Scan mode. In this case, the horizontal output is not produced.	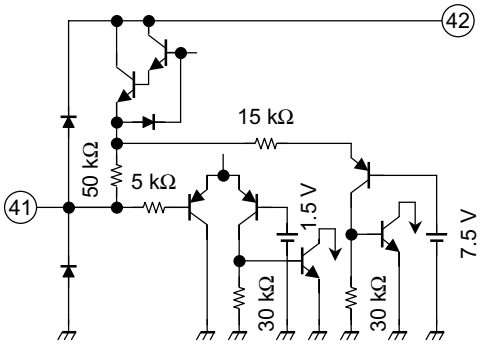	HIGH: 3.2 V LOW: 0.2 V
42	DEF V_{CC} (9 V)	The V_{CC} of DEF block. Connect 9 V (typ.) to this pin.	—	—

Pin No.	Pin Name	Function	Interface Circuit	Input/Output Signal
43	$32f_H$ VCO	Connect the ceramic oscillator for horizontal oscillation. The oscillator to be used is CSBLA503KECZF30, made by Murata electronics.	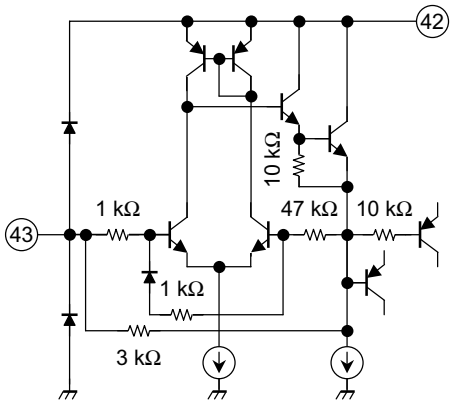	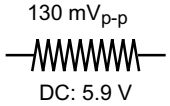
44	NC	None connect PIN. These pins connect to GND.	—	—
45	AFC filter	Connect the filter for horizontal AFC. The frequency of the horizontal output varies depending on the voltage at this pin.	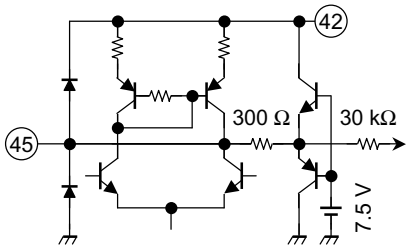	DC
46	DEF GND	The GND pin of DEF block.	—	—
47	SYNC. output	Output the synchronizing signal that was separated in the synchronous separation circuit. This pin is of the open collector system. Connect the pull-up resistor.	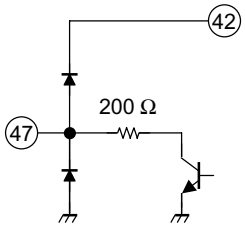	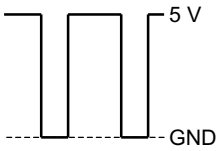
48	NC	None connect PIN. These pins connect to GND.	—	—
49	HD output	(1) When BUS HD-OUT = 0 Output the HD pulse (pulse duration: 1 μs) together with AFC. This pin also serves as the external input pin that accepts BPP (black peak detection stopping pulse) signal. (2) When BUS HD-OUT = 1 When AKB mode is ON, the pulse which covers AKB reference period is output.	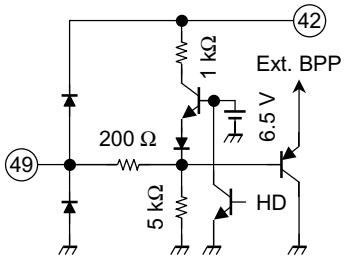	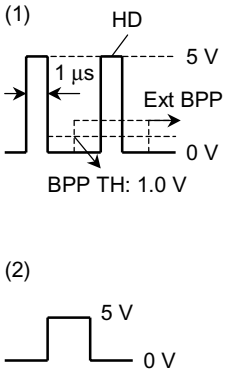

Pin No.	Pin Name	Function	Interface Circuit	Input/Output Signal
50	V-Sep.	Connect the filter separating the vertical synchronization.	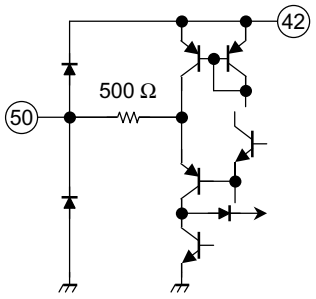	DC6.4 V
51	NC	None connect PIN. These pins connect to GND.	—	—
52	Y_1/SYNC input	The pin through which the composite video signal or Y signal is input. Input via clamp capacitor.	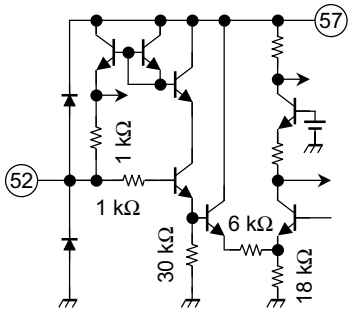	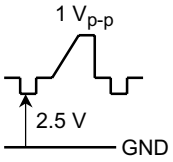
53	Chroma GND	The GND pin of the chroma processing block.	—	—
54	Chroma input	The pin through which the chroma is input. Input the chroma signal that was subjected to Y/C separation.	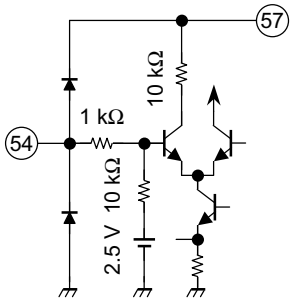	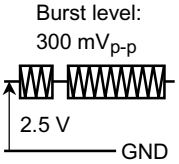
55	NC	None connect PIN. These pins connect to GND.	—	—
56	NC	None connect PIN. These pins connect to GND.	—	—
57	V_{CC1} (5 V)	The V_{CC} of the chroma and I^2C Bus blocks. Connect 5 V (typ.)	—	—

Pin No.	Pin Name	Function	Interface Circuit	Input/Output Signal
58	APC filter	Connect APC filter demodulating the chroma. The oscillation frequency of VCXO varies depending on the voltage at this pin.	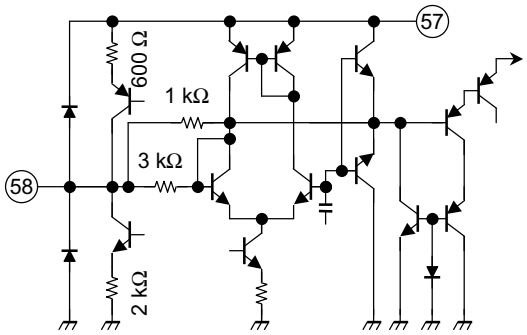	DC
60	NC	None connect PIN. These pins connect to GND.	—	—
62 61 59	4.43 MHz X'tal M PAL X'tal 3.58 MHz X'tal	Connect X'tal. In the case of series capacity, the oscillation frequency (f_0) can be changed. In the case of parallel capacity, the changeable range of frequency can be changed.	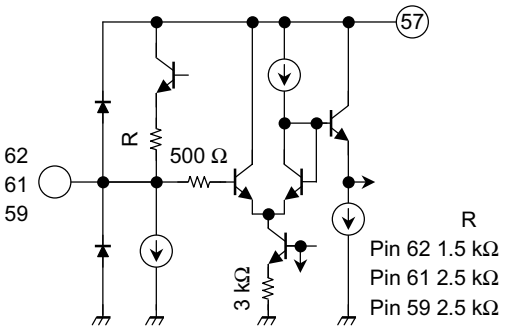	DC 4.0 V 90 mV_{p-p}
63	1H DL control	Outputs the result of whether the signal is PAL, SECAM or NTSC. Connect the output to the 1H DL IC. In the case of discrimination between white or black, the voltage just before that is retained. The voltage immediately after turning-on is not fixed.	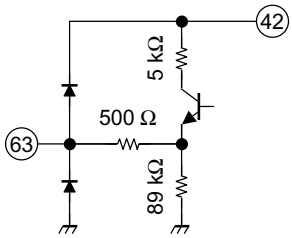	8.4 V: PAL 4.3 V: SECAM 0 V: NTSC
64	V/I output	Outputs R-Y (V) or Q signal. It includes LPF that can remove carrier. The chroma signal that routed ACC and TOF circuits (before demo input) can be monitored by pulling up this pin at 10 kΩ.	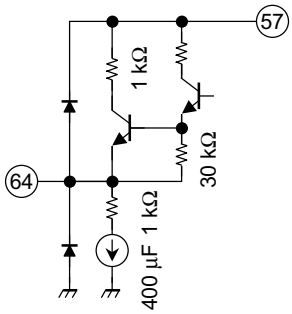	DC 2.5 V Rainbow color bar : 360 mV_{p-p}

Pin No.	Pin Name	Function	Interface Circuit	Input/Output Signal
65	U/Q output	Outputs B-Y (U) or I signal. It includes LPF that can remove carrier.	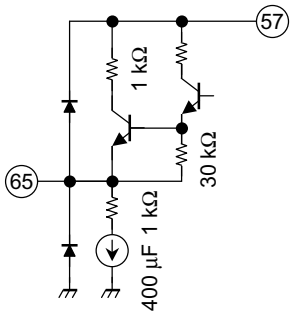	DC 2.5 V Rainbow color bar : 360 mV_{p-p}
66	NC	None connect PIN. These pins connect to GND.	—	—
67	Y_1 output	Outputs the Y signal that routed the f_{sc} TRAP (TRAP can be turned on or off with bus.) and the Y delay line circuit.	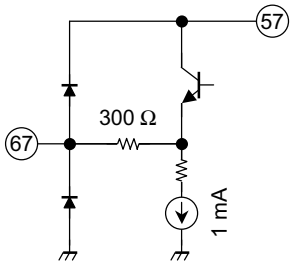	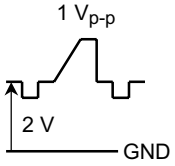
68	NC	None connect PIN. These pins connect to GND.	—	—
69	SECAM control	The input/output pin that is used to control the SECAM demodulation IC. When current stronger than 250 µA flows from this pin, that is recognized as SECAM.	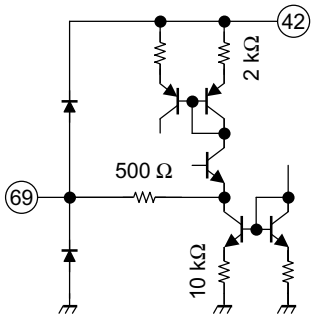	When PAL/NTSC 4.0 V When SECAM 0.75 V
70	SCP output	Outputs SCP (sand castle pulse). The output signal consists of clamp pulse, horizontal blanking pulse, and vertical blanking. The minimum load resistance is 3 kΩ.	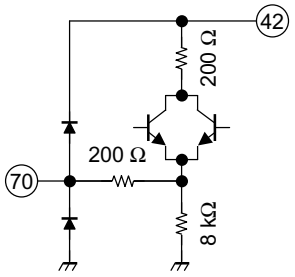	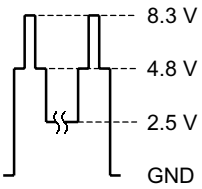
71	NC	None connect PIN. These pins connect to GND.	—	—

Pin No.	Pin Name	Function	Interface Circuit	Input/Output Signal
72	f_{sc} output	Outputs oscillation waveform of VCXO. When 3.58 NTSC killer-off this pin voltage sets 3.2 V. When B/W or other systems killer-off, this pin voltage sets 1.4 V.	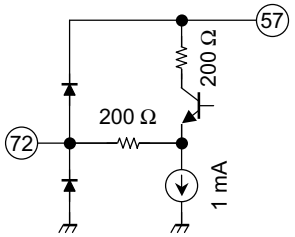	DC 3.58 NTSC : 3.2 V B/W or Others system : 1.4 V AC 0.6 V_{p-p}
73	SENSE input	This pin is to sense IK voltage feed-back from a CRT Drive circuit.	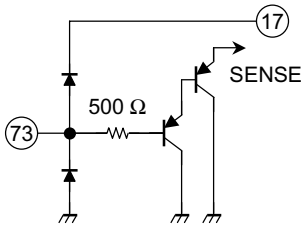	
74	R S/H	The same as pin 31 and 32.	The same as pin 31 and 32.	DC
75	NC	None connect PIN. These pins connect to GND.	—	—
76	Color limiter	Color the filter detecting the color limit.	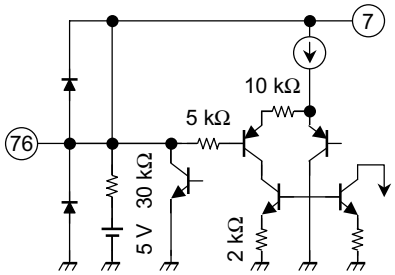	DC
77	NC	None connect PIN. These pins connect to GND.	—	—
78	Y_2 input	The pin through which B-Y (V)/I and R-Y (U)/Q signals are input. Input via clamp capacitor.	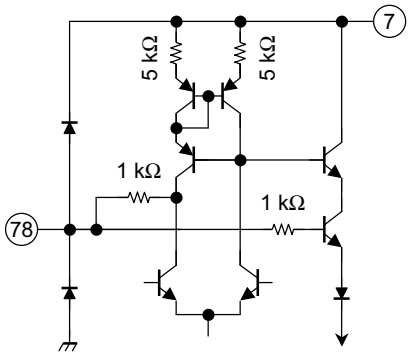	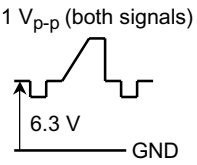
79	NC	None connect PIN. These pins connect to GND.	—	—

Bus Control Map
Write Mode
Slave Address: 88H (10001000)

Sub Address	D_7 MSB	D_6	D_5	D_4	D_3	D_2	D_1	D_0 LSB	Preset MSB	Preset LSB
00	P-MUTE	UNI-COLOR							1000	0000
01	BRIGHTNESS								1000	0000
02	COLOR							Y-MUTE	1000	0000
03	TINT							YM-SW	1000	0000
04	SHARPNESS							YNR	1000	0000
05	RGB BRIGHTNESS							WPS L	1000	0000
06	HI BRT	RGB CONTRAST							1000	0000
07	SUB COLOR					COLOR γ		CLT	1000	0000
08	SUB CONTRAST					Y-γ CURVE		FLESH	1000	0000
09	G (R) DRIVE							DR-SW	1000	0000
0A	B DRIVE							CDE	1000	0000
0B	HORIZONTAL POSITION					HV-SepL	V-OFF	H-BLK	1000	0000
0C	R CUT OFF								1000	0000
0D	G CUT OFF								1000	0000
0E	B CUT OFF								1000	0000
0F	R-Y PHASE		R/B GAIN		G/B GAIN		G-Y PHASE		0000	0000
10	COLOR SYSTEM			P/N-ID	BB SW	OSD-SL	OS-ACL	TX-ACL	0000	0000
11	VSM PHASE		VSM GAIN		APACON PEAK f_0			VSM-PB	0000	0000
12	DC RESTORATION POINT			DC RESTORATION RATE			DC REST. LIMIT		0000	0000
13	BLACK STRETCH POINT			APL VS BSP		Y-γ PNT	VSM-H.PB FREQ		0000	0000
14	SHR-TRACKING		TEST	RGB-γ	B.L.C.	B.S.G.	B.D.L.	BS-ARE	0000	0000
15	DYNAMIC ABL POINT			DYNAMIC ABL GAIN			AKB MODE		0000	0000
16	ABL POINT			ABL GAIN			RGB OUT MODE		0000	0000
17	HD-OUT	V-BLK	VERTICAL FREQUENCY			VERTICAL POSITION			0000	0000
18	Y-DL	C-TRAP	TOF f_0			TOF-Q			0000	0000

Read Mode
Slave Address: 89H (10001001)

	D_7	D_6	D_5	D_4	D_3	D_2	D_1	D_0
0	PORET	COLOR SYSTEM		X'tal		V-FREQ	V-STD	H-LOCK
1	N-DET	RGBOUT	Y_1-IN	IQ-IN	Y_2-IN	H-OUT	VP-OUT	IK-IN

Bus Control Feature
Write Mode

Item	Explain	Preset
P-MUTE	Picture mute SW; (0): OFF, (1): ON	ON
UNI-COLOR	Uni-color adjustment; −18dB to 0dB	Center
BRIGHTNESS	Brightness adjustment (including sub adjustment); −40 IRE to +40 IRE	Center
COLOR	Color adjustment; −20dB (color mute) to +4dB	0dB
Y-MUTE	Y mute SW; (0): ON, (1): OFF	ON
TINT	Hue adjustment; −32° to +32°	0°
TM-SW	Half-tone SW (YUV input); (0): OFF, (1): ON	OFF
SHARPNESS	Sharpness adjustment; −20dB to +14dB	+8dB
YNR	Y Noise Reduction SW; (0): OFF, (1): ON	OFF
RGB BRIGHTNESS	RGB Brightness Adjustment; −20 IRE to +20 IRE	0 IRE
WPS L	White Peak Suppression Level; (0): 130 IRE, (1): 110 IRE	130 IRE
HI BRT	High-bright color; (0): OFF, (1): ON	OFF
RGB CONTRAST	RGB Contrast; −18dB to 0dB	−18dB
SUB COLOR	Sub-color; −4dB to 0dB to +3dB	0dB
COLOR γ	Color γ correction point; (00): OFF, (01): 0.2 V_{p-p}, (10): 0.4 V_{p-p}, (11): 0.6 V_{p-p}	OFF
CLT	Color Limiter Level; (0): 1.8 V_{p-p}, (11): 2.2 V_{p-p}	1.8 V_{p-p}
SUB CONTRAST	Sub-contrast adjustment; −3dB to +3dB	0dB
Y-γ CURVE	Y-γ curve switching; (00): OFF, (01): −2.5dB, (10): −5.6dB, (11): −7dB	OFF
FLESH	Flesh color; (0): OFF, (1): ON	OFF
G (R)/B DRIVE	R (G)/B drive gain adjustment; −5dB to 0dB to +3dB	0dB (40h)
DG-SW	Drive gain base axis switching; (0): G, (1): R	G
CDE	Color Detail Enhancer; (0): ON (foced OFF when sharpness go through), (1): OFF	ON
HORIZONTAL POSITION	Horizontal position adjustment; −3 μs to +3 μs	0 μs
HV-SepL	Sync separation level; (from SYNC TIP) (0): 35%, (1): 40%	35%
V-OFF	Vertical output SW; (0): ON, (1): OFF	ON
H-BLK	Horizontal blanking SW; (0): ON, (1): OFF	ON
R/G/B CUTOFF	R/G/B cut-off adjustment; • When AKB-OFF: RGB output 2 V to 2.5 V to 3 V • When AKB-ON: SENS input 1 V_{p-p} to 1.5 V_{p-p} to 2 V_{p-p} (±5 IRE)	Center (80h)
R-Y PHASE	R-Y relative phase switching; (00): 90°, (01): 92°, (10): 94°, (11): 112°	90°
R/B GAIN	R/B relative amplitude switching; (00): 0.56, (01): 0.68, (10): 0.79, (11): 0.86	0.56
G/B GAIN	G/B relative amplitude switching; (00): 0.3, (01): 0.34, (10): 0.4, (11): 0.45	0.3
G-Y PHASE	G-Y relative phase switching; (00): 236°, (01): 240°, (10): 244°, (11): 253°	236°

Item	Explain	Preset
COLOR SYSTEM	Color system; System / X'tal / Color difference mute / Color difference input / TINI control (000): NTSC 3.58 Forced OFF I/Q Enable (001): NTSC 3.58 Forced OFF U/V Enable (010): NTSC 4.43 Forced OFF U/V Enable (011): PAL 4.43 (N) Forced OFF U/V Enable (100): PAL M Forced OFF U/V Enable (101): SECAM 4.43 Forced OFF U/V Enable (110): MULTI 3.58/4.43 Forced OFF U/V Enable (111): Trinorma 3.58/M/N Forced OFF U/V Enable	NTSC (000)
P/N ID	PAL/NTSC ident sensitivity switching; (0): LOW (when digital comb filter used), (1): Normal	LOW
BB SW	Blue Back SW; (0): OFF, (1): ON	OFF
OSD-SL	OSD peak suppressing level switching; (0): 96 IRE, (1): 76 IRE	96 IRE
OS-ACL	OSD ACL SW; (0): ON, (1): OFF	ON
TX-ACL	RGB ACL SW; (0): Gain 1/2, (1): Normal	Gain1/2
VSM PHASE	VSM output phase switching; (00): –40 ns, (01): –20 ns, (10): 0 ns, (11) +20 ns	–40 ns
VSM GAIN	VSM output gain switching; (00): 0dB, (01): –6dB, (10): –9dB, (11): OFF	0dB
APACON PEAK f_0	Apacon peak frequency switching; (000): Through (apacon off), (001): 4.0 MHz, (010): 3.3 MHz, (011): 2.5 MHz, (100): Through (apacon off), (101): 13 MHz, (110): 10 MHz, (111): 8 MHz	(000) Through
VSM PB	VSM output horizontal parabolic modulation SW; (0): Parabolic modulation OFF, (1): ON (nearby sharpness –3dB)	Parabolic modulation OFF
DC RESTORATION POINT	DC restoration start point; (000): 0% to (111): 42%	0%
DC RESTORATION RATE	DC restoration rate; (000): 100% to (111): 130%	100%
DC REST. LIMIT	DC restoration limit point; (APL) (00): 100%, (01): 87%, (10): 73%, (11): 60%	100%
BLACK STRETCH POINT (BSP)	Black stretcher start point; When APL 0% (000): 22 IRE to (111): 56 IRE	22 IRE
APL VS BSP (AVS)	APL level vs. black stretcher start point; (00): 0dB to (11): 1.5dB, BSP + APL × BSP × AVS	0dB
Y-γ PNT	Y-γ point switching; (0): 100 IRE, (1): 95 IRE	100 IRE
VSM-H. PB FREQ	VSM output horizontal parabolic frequency; (00): 15.7 kHz, (01): 24.8 kHz, (10): 31.5 kHz, (11): 33.75 kHz	—
SHR-TRACKING	Sharpness tracking; (00): HIGH, (11): LOW	HIGH
TEST	Test mode; (0): NORMAL (1): Test mode (for factory test) Switched by sub-address 17H <during gate-pulse> D_2 (0): during V-BLK, (1): NORMAL Y/RGB smoothing OFF, Monitor of DAC at HD output	NORMAL
RGB-γ	RGB-γ SW; (0): OFF, (1): ON	OFF
B.L.C.	Block level automatic correction (priority over black stretcher); max 7.5 IRE (0): OFF, (1): ON	OFF
B.S.G.	Black stretcher gain SW; (0) ON, (1): OFF	ON
B.D.L.	Black detection SW; (0): 3 IRE, (1): 0 IRE	3 IRE
BS-ARE	Black area reinforcement SW; For wide TV (when using time axis compression IC) (0): ON, (1): OFF	ON
DYNAMIC ABL POINT	Dynamic ABL detection voltage; (000): min to (111): max	min

Item	Explain	Preset
DYNAMIC ABL GAIN	Dynamic ABL sensitivity; (000): min to (111): max	min
AKB MODE	AKB MODE; Only black level (00): AKB OFF + S/H LOW, (01): AKB OFF + Cutoff BUS (10): AKB ON + I-DET NORMAL, (11): AKB ON + I-DET × 3	(00) AKB OFF + S/H LOW
ABL POINT	ABL detect voltage; (000): min to (111): max	min
ABL GAIN	ABL GAIN; (000): min to (111): max	min
RGB OUT MODE	RGB output mode SW; (00): NORMAL, (01): Only R, (10): Only G, (11): Only B	NORMAL
HD-OUT	HD output SW; (0): HD output, (1): AKB period pulse	HD output
V-BLK	Vertical Blanking SW; (0): ON, (1): OFF	ON
VERTICAL FREQUENCY	Vertical Frequency; (000): AUTO (50, 60 Hz), (001): AUTO (50, 60 Hz/V MASK OFF), (010): 60 Hz, (011): 60 Hz (V MASK OFF), (100): Forced 262.5H, (101): Forced 263H, (110): Forced 312.5H, (111): Forced 313H, When (100), (101), (110), (111): AFC Free-run	(000) AUTO
VERTICAL POSITION	Vertical position; (000): 0H to (111): 7H (1H STEP)	0H
Y-DL	Y-DL SW; (0) OFF, (1): ON (+80 ns)	OFF
C-TRAP	Chroma Trap SW; (0): OFF, (1): ON	OFF
TOF-f_0	Selectable TOF Peak Frequency; (000): $0.8f_{sc}$ + TOF OFF to (111): $1.5f_{sc}$	TOF OFF
TOR-Q	Selectable TOF Q; (000): 0.6 to (111): 1.2	0.6

Delay Time From Y_1 Input (PIN 52) to Y_1 Output (PIN 67)

Color	Trap	Y-DL	Delay Time
B/W	—	OFF ON	295 ns 375 ns
PAL/NTSC	OFF	OFF OFF ON ON	295 ns (4.43) 295 ns (3.58/M/N) 375 ns (4.43) 375 ns (3.58/M/N)
	ON	OFF OFF ON ON	295 ns (4.43) 310 ns (3.58/M/N) 375 ns (4.43) 390 ns (3.58/M/N)
SECAM	—	OFFON	495 ns 575 ns

Read Mode

Characteristic	Explain
PORSET	Power On Reset; (0): RESISTER PRESET, (1): NORMAL
COLOR SYSTEM	Color system; Receiving system (judgement of ID ON/OFF) (00): B/W, (01): SECAM, (10): PAL, (11): NTSC
X'tal	X'tal Mode; (00): —, (01): 4.43 (N), (10): M, (11): 3.58
V-FREQ	Vertical frequency; (0): 50 Hz, (1): 60 Hz
V-STD	Vertical Standard ident; (0) NON-STANDARD, (1): STANDARD
H-LOCK	Horizontal Lock ident; (0): LOCK, (1): NON-LOCK
N-DET	Noise ident result; (0): FEW, (1): MANY
RGBOUT, Y_1-IN, IQ-IN, Y_2-IN, H-OUT, VP-OUT	Self-ident result; (0): NG, (1): OK
IK IN	IK input ident result; (0): NG, (1): OK

I^2C Bus Transmission/Receiving

Slave Address: 88H

A_6	A_5	A_4	A_3	A_2	A_1	A_0	W/R
1	0	0	0	1	0	0	0/1

Start/Stop Condition

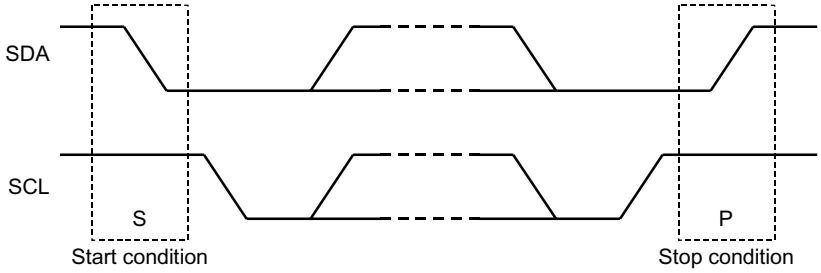

Bit Transmission

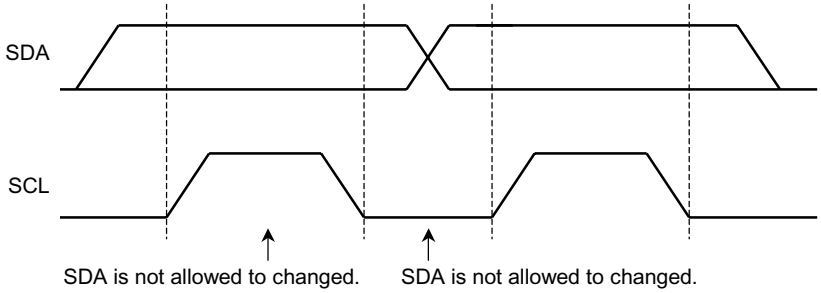

Confirmation Response

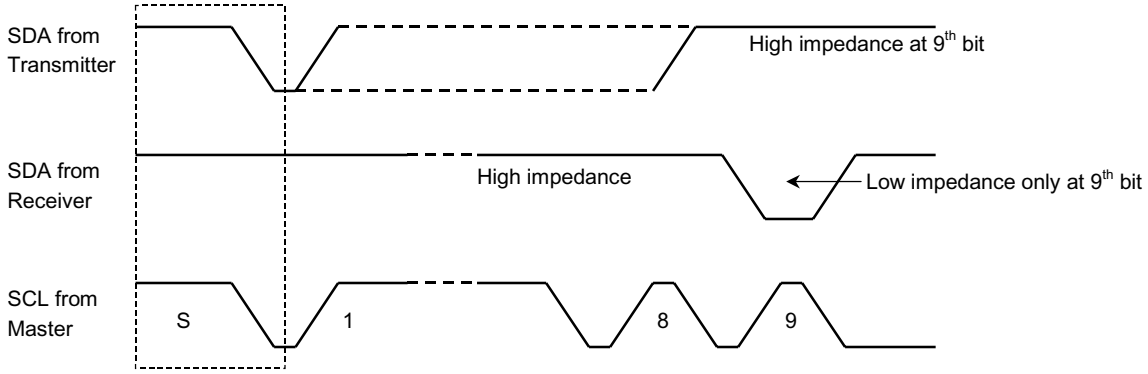

Data Transmit Format 1

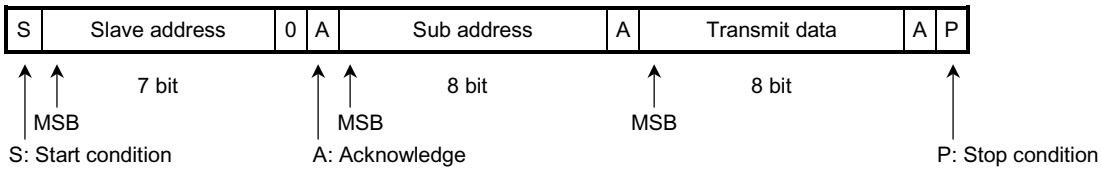

Data Transmit Format 2

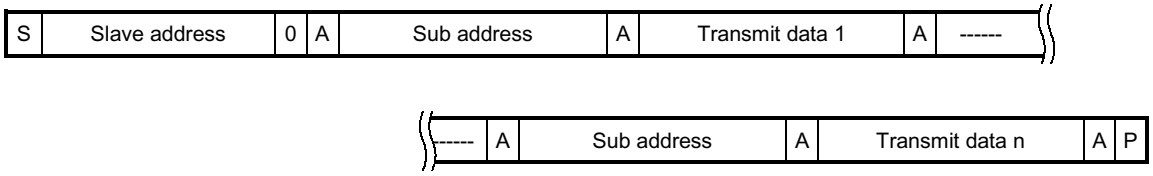

Data Receive Format

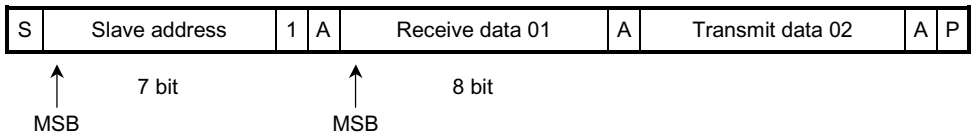

At the moment of the first acknowledge, the master transmitter becomes a master receiver and the slave receiver becomes a slave transmitter. This acknowledge is still generated by the slave.

The STOP condition is generated by the master.

Optional Data Transmit Format: Automatic Increment Mode

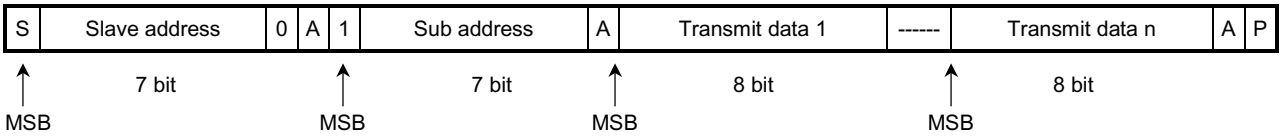

In this transmission method, data is set on automatically incremented sub-address from the specified sub-address.

Purchase of TOSHIBA I^2C components conveys a license under the Phillips I^2C Patent Rights to use these components in an I^2C system, provided that the system conforms to the I^2C standard Specification as defined by Phillips.

○ Pin 41 H-out (mode SW)
You can select the Double Scan Mode (external CP (clamping pulse) input mode), by connecting Pin 41 to DEF V_{CC}. (the threshold of pin 23: 8.7 V = DEF V_{CC} – 0.3 V)
When Double Scan Mode, function of Pin 38 and 40 are changed.

- Normal Scan (internal CP) Mode: Pin 41 — H-out
  The function of Pin 40 is curve correction input, that of Pin 38 is FBP (flay back pulse) input.
  The input signals of Y_2, U/I and V/I inputs (pin 1, 2 and 3), Analog OSD inputs (pin 18, 19 and 20), Analog RGB inputs (pin 22, 24 and 25) are clamped of the internal CP based on the Y_1/Sync input (pin 52).
- Double Scan (external CP input) Mode: Pin 41 — H-out
  The function of Pin 40 is EXT/BPP (Note 2) input, that of Pin 38 is H/V BLK (blanking) input.
  The input signals of Y_2, U/I and V/I inputs (pin 1, 78 and 80), Analog OSD inputs (pin 18, 19 and 20), Analog RGB inputs (pin 22, 24 and 25) are clamped of the external CP based on Pin 40.
  In case of Double Scan Mode, bus "V-BLK" should be set (1); OFF.

Terminal Functions

Mode / Pin No.	Normal Scan Mode (internal CP)	Double Scan Mode (external CP input)
Pin 41	H-out	DEF V_{CC} (9 V)
Pin 40	Curve correction signal input	EXT CP/BPP input
Pin 38	FBP input (for AFC-2 detection, H BKL)	H/V BLK input (for RGB H/V BLK, AKB)
Pin 1, 78, 80	Clamping by internal CP (based on pin 52)	Clamping by external CP (based on pin 40)
Pin 18, 19, 20		
Pin 22, 24, 25		
Pin 52	Normal scan; Y/Sync signal input	
Pin 49	Normal scan; HD pulse output (based on pin 52)	
Pin 29	Normal scan; VP output (based on pin 52)	

Note 2: BPP: Black Peak detection stopping Pulse

Maximum Ratings (Ta = 25°C)

Characteristics	Symbol	Rating	Unit
Supply voltage	V_{CCmax}	12	V
Input terminal voltage	e_{inmax}	9	V_{p-p}
Power dissipation	P_D (Note 3)	1920	mW
Power dissipation reduction rate	1/Qja	15.4	mW/°C
Operating temperature	T_{opr}	−20 to 65	°C
Storage temperature	T_{stg}	−55 to 150	°C

Note 3: Refer to the figure below. (with device mounted on a PCB whose dimensions are 114.3 mm 76.2 mm × 1.6 mm and whose surface is 20% copper.
mount the device on a PCB of at least these dimensions and whose surface is at least 20% copper.)

Note 4: Short pins 9 and 10 together on the PCB.

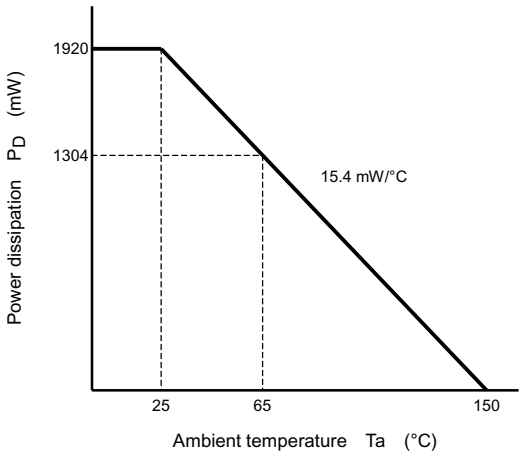

Figure 1 Power Dissipation Reduction Against Higher Temperature

Recommended Condition In Use

Characteristic	Description	Min	Typ.	Max	Unit
Supply Voltage	Pin 65	4.3	5.0	5.3	V
	Pin 42, Pin 17, Pin 7	8.7	9.0	9.3	
Y_1/Sync, Y_2 Input Signal Level	White: 100%, including, synchronization (synchronization: minus)	0.9	1.0	1.1	V_{p-p}
Chroma Input Signal Level	When TOF OFF (burst level)	200	300	400	mV_{p-p}
	When TOF ON (burst level)	100	200	300	
I/Q, U/V Input Level	B:C = 1:1	—	300	—	mV_{p-p}
OSD/Analog RGB Input Level	When OSD input (DC coupling)	4.2	—	5.0	V
	When analog RGB input (AC coupling)	0.4	0.5	0.6	V_{p-p}
Analog RGB Input Level	—	0.4	0.5	0.6	
FBP Width	—	11	12	13	μs
FBP Input Current	—	—	—	1.5	mA
RGB Output Current	—	—	1.0	2.0	
H. Output Current	—	—	3.0	10.0	
Pin 47 Input Current	—	—	0.5	1.0	

Electrical Characteristics
(V_{CC1} = 5 V, V_{CC2}/V_{CC3}/DEF V_{CC} = 9 V, Ta = 25°C, unless otherwise specified)
Supply Current

Pin Name	Symbol	Test Circuit	Min	Typ.	Max	Unit
V_{CC1}	I_{CC1}	—	34.0	40.5	50.0	mA
V_{CC2}	I_{CC2}	—	33.0	40.0	49.0	
V_{CC3}	I_{CC3}	—	32.0	39.5	48.0	
DEF V_{CC}	I_{CC4}	—	9.5	12.8	18.0	

Terminal Voltage

Pin No.	Pin Name	Symbol	Test Circuit	Min	Typ.	Max	Unit
1	V/I INPUT	V_1	—	4.8	5.0	5.2	V
2	BLACK PEAK HOLD	V_2	—	4.2	4.4	4.6	
3	APL DET	V_3	—	4.8	5.0	5.2	
5	VM OUTPUT	V_5	—	3.2	3.5	3.8	
8	ABCL INPUT	V_8	—	5.85	6.10	6.35	
18	OSD/ANALOG R INPUT	V_{18}	—	3.3	3.6	3.9	
19	OSD/ANALOG G INPUT	V_{19}	—	3.3	3.6	3.9	
20	OSD/ANALOG B INPUT	V_{20}	—	3.3	3.6	3.9	
21	Ys1	V_{21}	—	0	0.1	0.3	
22	ANALOG R INPUT	V_{22}	—	3.5	3.8	4.1	
24	ANALOG G INPUT	V_{24}	—	3.5	3.8	4.1	
25	ANALOG B INPUT	V_{25}	—	3.5	3.8	4.1	
27	Ys2	V_{27}	—	0	0.1	0.3	
40	CURVE CORRECTION	V_{40}	—	4.3	4.5	4.7	
43	$32f_H$ VCO	V_{43}	—	5.4	5.7	6.0	
49	SYNC. IN	V_{49}	—	2.60	2.85	3.10	
50	V SEP.	V_{50}	—	5.7	6.1	6.5	
52	Y_1 INPUT	V_{52}	—	2.7	3.0	3.3	
54	CHROMA INPUT	V_{54}	—	2.2	2.5	2.8	
59	3.58 MHz X'tal	V_{59}	—	3.7	4.0	4.3	
61	M PAL X'tal	V_{61}	—	3.7	4.0	4.3	
62	4.43 MHz X'tal	V_{62}	—	3.7	4.0	4.3	
64	V/I OUTPUT	V_{64}	—	2.2	2.5	2.8	
65	U/Q OUTPUT	V_{65}	—	2.2	2.5	2.8	
67	Y_1 OUTPUT	V_{67}	—	1.7	2.0	2.3	
69	SECAM CONT.	V_{69}	—	3.7	4.0	4.3	
76	COLOR LIMITER	V_{76}	—	6.6	6.9	7.2	
78	Y_2 INPUT	V_{78}	—	6.1	6.3	6.5	
80	U/Q INPUT	V_{80}	—	4.8	5.0	5.2	

AC Characteristic
Video Section

Characteristics	Symbol	Test Circuit	Test Condition	Min	Typ.	Max	Unit
Y_2 input dynamic range	DR_{53}	—	—	0.7	1.0	1.5	V_{p-p}
Black level shift	V_B	—	(Note V_1)	–5	0	5	mV
	V_{B3}	—		35	42	49	
Black stretching amplifier maximum gain	G_{BS}	—	(Note V_2)	1.30	1.40	1.50	times
Black stretching start point (1)	P_{BST1}	—	(Note V_3)	17	22	27	IRE
	P_{BST2}	—		51	56	61	
Black stretching start point (2)	P_{BS1}	—	(Note V_4)	—	0	4	IRE
	P_{BS2}	—		14	20	26	
D.ABL detection voltage	ΔV_{001}	—	(Note V_5)	30	50	70	mV
	ΔV_{010}	—		90	110	130	
	ΔV_{100}	—		220	240	260	
D.ABL sensitivity	S_{DAMIN}	—	(Note V_6)	—	0	0.04	V/V
	S_{DAMAX}	—		0.280	0.295	0.310	
Black level correction	B_{LC}	—	(Note V_7)	6.5	7.0	7.5	IRE
Y γ correction point	$P\gamma_0$	—	—	95	100	105	IRE
	$P\gamma_{100}$	—		2	5	8	
Y γ correction gain	$G\gamma_{01}$	—	—	–3.5	–2.5	–1.5	dB
	$G\gamma_{10}$	—		–5.8	–4.8	–3.8	
	$G\gamma_{11}$	—		–7.5	–6.5	–5.5	
Black peak detection level	ΔV_{BP}	—	(Note V_8)	–15	0	15	mV
DC restoration gain	ADT100	—	(Note V_9)	0.9	1.0	1.1	times
	ADT130	—		1.25	1.35	1.45	
DC restoration start point	V_{DT0}	—	(Note V_{10})	–3	0	3	%
	V_{DT48}	—		42	47	51	
DC restoration limit point	P_{DTL60}	—	(Note V_{11})	59	63	67	%
	P_{DTL73}	—		71	75	79	
	P_{DTL87}	—		83	87	91	
	P_{DTL100}	—		95	99	103	
Sharpness peak frequency	F_{APL01}	—	—	3.3	4.2	5.1	MHz
	F_{APL10}	—		2.6	3.3	4.0	
	F_{APL11}	—		2.0	2.5	3.0	
	F_{APH01}	—		11.2	14.5	17.4	
	F_{APH10}	—		9.5	11.9	14.3	
	F_{APH11}	—		6.5	8.1	9.7	
Sharpness control range	G_{MAXL}	—	(Note V_{12})	11	14	17	dB
	G_{MINL}	—		–11	–8	–5	
	G_{MAXH}	—		11	14	17	
	G_{MINH}	—		–9	–6	–3	
Sharpness control center gain	G_{CENL}	—	—	7	10	3	dB
	G_{CENH}	—		7	10	3	

Characteristics	Symbol	Test Circuit	Test Condition	Min	Typ.	Max	Unit
YNR characteristic	G_{YL}	—	(Note V_{13})	–11	–8	–5	dB
	G_{YH}	—		–9	–6	–4	
SRT response to 2T pulse input	T_{SL1}	—	(Note V_{14})	100	120	140	ns
	T_{SRTL}	—		40	60	80	
	T_{SH1}	—		160	180	200	
	T_{SRTH}	—		20	30	45	
VSM peak frequency	F_{VL}	—	When normal mode	7	9	11	MHz
	F_{VH}	—	When double scan mode	12.5	16	19.5	
VSM gain	G_{VL00}	—	(Note V_{15})	11	13	15	dB
	G_{VL01}	—		–7.5	–6	–4.5	
	G_{VL10}	—		–11	–9	–8	
	G_{VL11}	—		–∞	–35	–29	
	G_{VH00}	—		11	13	15	
	G_{VH01}	—		–7.5	–6	–5	
	G_{VH10}	—		–11	–9	–7	
	G_{VH11}	—		–∞	–32	–26	
VSM parabolic modulating gain	G_{VRL}	—	(Note V_{16})	–4	–3	–2	dB
	G_{VLL}	—		–4	–3	–2	
	G_{VRH}	—		–4	–3	–2	
	G_{VLH}	—		–4	–3	–2	
Threshold voltage of VSM muting	V_{SR36}	—	Pin 21, Pin 27	0.65	0.75	0.85	V
Response time for VSM high speed muting	T_{VML1}	—	(Note V_{17})	0	50	100	ns
	T_{VML2}	—		0	50	100	
	T_{VML3}	—		0	50	100	
	T_{VML4}	—		0	50	100	
	T_{VMH1}	—		0	50	100	
	T_{VMH2}	—		0	50	100	
	T_{VMH3}	—		0	50	100	
	T_{VMH4}	—		0	50	100	
Between Y_2 input and R output delay time	T_{Y2RD}	—	When through	26	36	46	ns
	T_{Y2RL}	—	When normal mode	200	220	240	
	T_{Y2RH}	—	When double scan mode	85	100	115	

Chroma Section

Characteristics		Symbol	Test Circuit	Test Condition	Min	Typ.	Max	Unit
ACC characteristic		F_{600}	—	(Note C_1)	0.300	0.355	0.410	V_{p-p}
		F_{300}	—		0.300	0.355	0.410	
		F_{30}	—		0.290	0.343	0.400	
		F_{10}	—		0.090	0.113	0.135	
		A	—		0.90	0.97	1.05	times
Sub color control characteristic		es+	—	—	2.0	3.0	4.0	dB
		es−	—		−6.0	−4.3	−2.0	
APC frequency control sensitivity		β_3	—	(Note C_2)	0.70	1.20	1.70	Hz/mV
		β_4	—		0.70	1.20	1.70	
		β_M	—		0.70	1.20	1.70	
APC pull-in/hold range		$f3_{PH}$	—	(Note C_3)	250	500	2000	Hz
		$f3_{HH}$	—		250	500	2000	
		$f3_{PL}$	—		−2000	−500	−250	
		$f3_{HL}$	—		−2000	−500	−250	
		$f4_{PH}$	—		250	500	2000	
		$f4_{HH}$	—		250	500	2000	
		$f4_{PL}$	—		−2000	−500	−250	
		$f4_{HL}$	—		−2000	−500	−250	
		fM_{PH}	—		250	500	2000	
		fM_{HH}	—		250	500	2000	
		fM_{PL}	—		−2000	−500	−250	
		fM_{HL}	—		−2000	−500	−250	
3.58 MHz/4.43 MHz free run frequency		f_{03}	—	f_0 = 3.579545 MHz	−200	0	200	Hz
		f_{04}	—	f_0 = 4.433619 MHz	−200	0	200	
		f_{0M}	—	f_0 = 3.575611 MHz	−200	0	200	
f_{sc} output amplitude		f_{3c}	—	When 3.58 NTSC	0.54	0.78	0.96	V_{p-p}
		f_{4c}	—	When 4.43 PAL	0.52	0.72	0.90	
		f_{Mc}	—	When M-PAL	0.54	0.78	0.96	
f_{sc} output DC level		V_{1a}	—	When 3.58 NTSC	2.80	3.20	3.50	V
		V_{1b}	—	Except for 3.58 NTSC	1.15	1.55	1.75	
IQ color difference signal output level	Q Axis	v_{BN}	—	When B:C = 1:1 signal	290	355	415	mV_{p-p}
	I Axis	v_{RN}	—		290	355	415	
IQ signal demodulation ratio		v_{RN}/v_{BN}	—	R-Y/B-Y	0.94	1.00	1.15	—
IQ demodulation angle	Q Axis	θ_{BN}	—	—	29.0	33.0	37.0	°
	I Axis	θ_{RN}	—		118.0	123.0	126.0	
IQ demodulation angle	Relative	θ_{BRN}	—	I-Q	87.0	90.0	93.0	°
UV color difference signal output level	B-Y	v_{BP}	—	When B:C = 1:1 signal	290	355	415	mV_{p-p}
	R-Y	v_{RP}	—		290	355	415	
UV signal demodulation ratio		v_{RP}/v_{BP}	—	R-Y/B-Y	0.94	1.00	1.10	—
UV demodulation angle	B-Y	θ_{BP}	—	—	−5.0	0.0	3.0	°
	R-Y	θ_{RP}	—		85.0	90.0	93.0	
UV demodulation angle	Relative	θ_{BRP}	—	—	87.0	90.0	93.0	°

Characteristics		Symbol	Test Circuit	Test Condition	Min	Typ.	Max	Unit
Residual carrier level		v_{BNe}	—	f_{sc} level	—	1.90	4.00	mV_{p-p}
		v_{RNe}	—		—	1.90	4.00	
		v_{BPe}	—		—	1.90	4.00	
		v_{RPe}	—		—	1.90	4.00	
Residual higher harmonics level		v_{BHNe}	—	$f_{sc} \times 2$ level	—	1.90	4.00	mV_{p-p}
		v_{RHNe}	—		—	1.90	4.00	
		v_{BHPe}	—		—	1.90	4.00	
		v_{RHPe}	—		—	1.90	4.00	
Color difference output DC voltage	3.58 NTSC	V_{BN}	—	B-Y output	1.80	2.15	2.50	V
		V_{RN}	—	R-Y output	1.90	2.24	2.60	
	4.43 NTSC	V_{BP}	—	B-Y output	1.80	2.15	2.50	
		V_{RP}	—	R-Y output	1.90	2.25	2.60	
1HDL output DC level	PAL	V_{DLP}	—	Output from pin	8.00	8.30	8.60	V
	NTSC	V_{DLS}	—		4.00	4.30	4.60	
	SECAM	V_{DLN}	—		0.01	0.50	0.20	
Sand castle pulse height	CP	SCH	—	—	7.50	7.80	8.10	V
	HD	SCM	—		3.95	4.20	4.45	
	VD	SCL	—		2.25	2.50	2.75	
SECAM output DC level		SEN	—	(Note C_4)	3.70	4.00	4.30	V
		SEP	—		3.70	4.00	4.30	
		SES	—		0.40	0.70	1.00	
NTSC ident sensitivity		vN_{CL}	—	(Note C_5)	3.80	5.83	7.87	mV_{p-p}
		vN_{CH}	—		2.52	3.88	5.24	
		vN_{BL}	—		3.73	5.74	7.75	
		vN_{BH}	—		2.44	3.75	5.06	
PAL ident sensitivity		vP_{CL}	—	(Note C_6)	4.80	6.83	8.87	mV_{p-p}
		vP_{CH}	—		3.52	4.88	6.24	
		vP_{BL}	—		4.73	6.74	8.75	
		vP_{BH}	—		3.44	4.75	6.06	
TOF characteristic		GF_{H3}	—	(Note C_7)	20.7	22.7	24.7	dB
		GF_{C3}	—		20.2	22.2	24.2	
		GF_{L3}	—		18.2	20.2	22.2	
		GF_{H4}	—		19.1	21.1	23.1	
		GF_{C4}	—		19.4	21.4	23.4	
		GF_{L4}	—		18.8	20.8	22.8	
Y_1 in to Y_1 out AC gain	Through	GYs	—	20 ℓog (output level/input level)	−1.21	0.00	1.06	dB
	Normal	GYd	—		−1.21	0.00	1.06	
	Double	GYt	—		−1.21	0.00	1.06	
Y_1 in to Y_1 out frequency bandwidth		Gf_{Y1}	—	—	−4.0	−1.0	0.0	dB
Trap filter gain	3.58	GT_{C3}	—	—	—	−25	−20	dB
	4.43	GT_{C4}	—		—	−25	−20	
Y_1 input dynamic range	3.58 NTSC	VD3	—	—	1.30	1.60	—	V_{p-p}
	4.43 PAL	VD4	—		1.30	1.60	—	

Text Section

Characteristics		Symbol	Test Circuit	Test Condition	Min	Typ.	Max	Unit
AC gain		G_R	—	(Note T_1)	2.95	3.30	3.70	times
		G_G	—		2.95	3.30	3.70	
		G_B	—		2.95	3.30	3.70	
AC gain axial difference		$G_{G/R}$	—	—	0.94	1.00	1.06	—
		$G_{B/R}$	—		0.94	1.00	1.06	
Output bandwidth	R	G_{fR}	—	at –3dB point	25	30	—	MHz
	G	G_{fG}	—		25	30	—	
	B	G_{fB}	—		25	30	—	
Uni-color control characteristic		v_uMAX	—	(Note T_2)	0.59	0.66	0.74	V_{p-p}
		v_uCNT	—		0.34	0.39	0.44	
		v_uMIN	—		0.09	0.11	0.13	
		Δv_u	—		14	15	16	dB
Brightness control characteristic		VbrMAX	—	(Note T_3)	4.1	4.4	4.7	V
		VbrCNT	—		3.25	3.55	3.85	
		VbrMIN	—		2.4	2.7	3.0	
Brightness control sensitivity		Gbr	—	(Note T_4)	5.7	6.6	7.5	mV
White peak slice level		Vwps1	—	(Note T_5)	2.75	2.95	3.15	V_{p-p}
		Vwps2	—		2.30	2.50	2.70	
Black peak slice level		V_{BPS}	—	(Note T_6)	2.10	2.26	2.42	V
Signal-to-noise ratio of RGB output	R	N_{41}	—	—	—	–58	–49	dB
	G	N_{42}	—		—	–58	–49	
	B	N_{43}	—		—	–58	–49	
Half-tone gain		G_{HT1}	—	(Note T_7)	0.45	0.50	0.55	times
		G_{HT2}	—		0.45	0.50	0.55	
Half-tone ON voltage		V_{HT}	—	Pin 6	0.65	0.85	1.05	V
V-BLK pulse output level	R	VVR	—	—	0.3	0.8	1.3	V
	G	VVG	—		0.3	0.8	1.3	
	B	VVB	—		0.3	0.8	1.3	
H-BLK pulse output level	R	VHR	—	—	0.3	0.8	1.3	V
	G	VHG	—		0.3	0.8	1.3	
	B	VHB	—		0.3	0.8	1.3	
Blanking pulse delay time		t_{dON}	—	(Note T_8)	—	0.1	0.3	µs
		t_{dOFF}	—		—	0.15	0.3	
Sub-contrast control range		ΔV_{SU+}	—	—	2.0	2.5	3.0	dB
		ΔV_{SU-}	—		–3.8	–3.3	–2.8	
RGB output voltage		$V_{\#41}$	—	(Note T_9)	2.25	2.50	2.75	V
		$V_{\#42}$	—		2.25	2.50	2.75	
		$V_{\#43}$	—		2.25	2.50	2.75	
RGB output voltage triaxial difference		ΔV_{out}	—	—	—	0	150	mV
Cut-off voltage control range		CUT+	—	(Note T_{10})	0.45	0.50	0.55	V
		CUT–	—		0.45	0.50	0.55	

Characteristics	Symbol	Test Circuit	Test Condition	Min	Typ.	Max	Unit
Drive adjustment control range	DRG+	—	(Note T_{11})	2.35	2.85	3.35	dB
	DRG–	—		–5.75	–5.00	–4.25	
	DRB+	—		2.35	2.85	3.35	
	DRB–	—		–5.75	–5.00	–4.25	
	DRR+	—		2.35	2.85	3.35	
	DRR–	—		–5.75	–5.00	–4.25	
Output voltage of muting	MURD	—	(Note T_{12})	2.1	2.26	2.42	V
	MUGD	—		2.1	2.26	2.42	
Output voltage of blue back	BB_R	—	(Note T_{13})	2.1	2.26	2.42	V
	BB_G	—		2.1	2.26	2.42	
	BB_B	—		1.15	1.30	1.45	V_{p-p}
ACL characteristic	ACL1	—	(Note T_{14})	–5	–3	–1	dB
	ACL2	—		–14.5	–13	–11.5	
ABL point	ABL_{P1}	—	(Note T_{15})	0.12	0.17	0.22	V
	ABL_{P2}	—		0.04	0.09	0.14	
	ABL_{P3}	—		–0.05	0.00	0.05	
	ABL_{P4}	—		–0.15	–0.10	–0.05	
	ABL_{P5}	—		–0.24	–0.19	–0.14	
	ABL_{P6}	—		–0.34	–0.29	–0.24	
	ABL_{P7}	—		–0.43	–0.38	–0.33	
	ABL_{P8}	—		–0.50	–0.45	–0.40	
ABL gain	ABL_{G1}	—	(Note T_{16})	–0.04	0.00	0.00	V
	ABL_{G2}	—		–0.09	–0.04	0.00	
	ABL_{G3}	—		–0.24	–0.19	–0.14	
	ABL_{G4}	—		–0.40	–0.35	–0.30	
	ABL_{G5}	—		–0.56	–0.51	–0.46	
	ABL_{G6}	—		–0.73	–0.68	–0.63	
	ABL_{G7}	—		–0.90	–0.85	–0.80	
	ABL_{G8}	—		–0.10	–0.92	–0.87	
RGB output mode	$V43_R$	—	(Note T_{17})	2.25	2.5	2.75	V
	$V42_R$	—		0.3	0.8	1.3	
	$V41_R$	—		0.3	0.8	1.3	
	$V43_G$	—		0.3	0.8	1.3	
	$V42_G$	—		2.25	2.5	2.75	
	$V41_G$	—		0.3	0.8	1.3	
	$V43_B$	—		0.3	0.8	1.3	
	$V42_B$	—		0.3	0.8	1.3	
	$V41_B$	—		2.25	2.5	2.75	
ACB pulse phase/amplitude	θ_{ACBR}	—	(Note T_{18})	—	1	—	H
	θ_{ACBG}	—		—	2	—	
	θ_{ACBB}	—		—	3	—	
	V_{ACBR}	—		0.1	0.125	0.15	V_{p-p}
	V_{ACBG}	—		0.1	0.125	0.15	
	V_{ACBB}	—		0.1	0.125	0.15	

Characteristics		Symbol	Test Circuit	Test Condition	Min	Typ.	Max	Unit
IK input level		IKR	—	Pin 73 input level	1.45	1.65	1.85	V
		IKG	—		1.45	1.65	1.85	
		IKB	—		1.45	1.65	1.85	
RGB γ correction characteristic		γ_{1R}	—	(Note T_{19})	40	50	60	IRE
		γ_{2R}	—		60	70	80	
		Δ_{1R}	—		0.75	1.50	2.25	dB
		Δ_{2R}	—		–0.75	0.00	0.75	
		Δ_{3R}	—		–4.05	–3.30	–2.55	
		γ_{1G}	—		40	50	60	IRE
		γ_{2G}	—		60	70	80	
		Δ_{1G}	—		0.75	1.50	2.25	dB
		Δ_{2G}	—		–0.75	0.00	0.75	
		Δ_{3G}	—		–4.05	–3.30	–2.55	
		γ_{1B}	—		40	50	60	IRE
		γ_{2B}	—		60	70	80	
		Δ_{1B}	—		0.75	1.50	2.25	dB
		Δ_{2B}	—		–0.75	0.00	0.75	
		Δ_{3B}	—		–4.05	–3.30	–2.55	
Analog RGB gain		G_{TXR}	—	(Note T_{20})	4.0	4.5	5.0	times
		G_{TXG}	—		4.0	4.5	5.0	
		G_{TXB}	—		4.0	4.5	5.0	
Analog RGB gain triaxial difference		$G_{TXG/R}$	—	—	0.94	1.00	1.06	—
		$G_{TXB/R}$	—		0.94	1.00	1.06	
Analog RGB bandwidth	R	Gf_{TXR}	—	at –3dB point	25	30	—	dB
	G	Gf_{TXG}	—		25	30	—	
	B	Gf_{TXB}	—		25	30	—	
Analog RGB input dynamic range	R	DR35	—	—	0.6	1.0	1.5	V_{p-p}
	G	DR34	—		0.6	1.0	1.5	
	B	DR33	—		0.6	1.0	1.5	
Analog RGB white peak slice level		VTXWPSR	—	(Note T_{21})	2.30	2.55	2.80	V_{p-p}
		VTXWPSG	—		2.30	2.55	2.80	
		VTXWPSB	—		2.30	2.55	2.80	
Analog RGB black peak limiter level		V_{BPSR}	—	(Note T_{22})	2.10	2.26	2.42	V
		V_{BPSG}	—		2.10	2.26	2.42	
		V_{BPSB}	—		2.10	2.26	2.42	

Characteristics	Symbol	Test Circuit	Test Condition	Min	Typ.	Max	Unit
RGB contrast control characteristic	$vuTXR_{MAX}$	—	(Note T_{23})	0.8	0.9	1.0	V_{p-p}
	$vuTXG_{MAX}$	—		0.8	0.9	1.0	
	$vuTXB_{MAX}$	—		0.8	0.9	1.0	
	$vuTXR_{CNT}$	—		0.45	0.52	0.59	
	$vuTXG_{CNT}$	—		0.45	0.52	0.59	
	$vuTXB_{CNT}$	—		0.45	0.52	0.59	
	$vuTXR_{MIN}$	—		0.10	0.12	0.14	
	$vuTXG_{MIN}$	—		0.10	0.12	0.14	
	$vuTXB_{MIN}$	—		0.10	0.12	0.14	
	ΔvuTXR	—		15.5	17.0	18.5	dB
	ΔvuTXG	—		15.5	17.0	18.5	
	ΔvuTXB	—		15.5	17.0	18.5	
Analog RGB brightness control characteristic	Vbr_{TXMAX}	—	(Note T_{24})	3.3	3.5	3.7	V
	Vbr_{TXCNT}	—		2.85	3.05	3.25	
	Vbr_{TXMIN}	—		2.45	2.65	2.85	
Analog RGB brightness control sensitivity	GbrTX	—	(Note T_{25})	6.0	6.8	7.6	mV
Analog RGB mode ON voltage	VTXON	—	Pin 27	0.65	0.85	1.05	V
Text ACL characteristic	TXACL1	—	(Note T_{26})	−2	−1	−0.05	dB
	TXACL2	—		−6.5	−4.5	−2.5	
	TXACL3	—		−6.5	−4.5	−2.5	
	TXACL4	—		−16.5	−15.0	−13.5	
Analog OSD gain	$GOSD_R$	—	(Note T_{27})	4.1	4.8	5.4	times
	$GOSD_G$	—		4.1	4.8	5.4	
	$GOSD_B$	—		4.1	4.8	5.4	
Analog OSD gain triaxial difference	$GOSD_{G/R}$	—	G/R	0.94	1.00	1.06	—
	$GOSD_{B/R}$	—	B/R	0.94	1.00	1.06	
Analog OSD band width	$GfOSD_R$	—	at −3dB point	25	30	—	dB
	$GfOSD_G$	—		25	30	—	
	$GfOSD_B$	—		25	30	—	
Analog OSD white peak slice level	V_{OSD1R}	—	(Note T_{28})	1.80	2.00	2.20	V_{p-p}
	V_{OSD1G}	—		1.80	2.00	2.20	
	V_{OSD1B}	—		1.80	2.00	2.20	
	V_{OSD2R}	—		1.45	1.65	1.85	
	V_{OSD2G}	—		1.45	1.65	1.85	
	V_{OSD2B}	—		1.45	1.65	1.85	
Analog OSD black peak limiter level	V_{OSD3R}	—	(Note T_{29})	2.10	2.26	2.42	V
	V_{OSD3G}	—		2.10	2.26	2.42	
	V_{OSD3B}	—		2.10	2.26	2.42	
Analog OSD output DC voltage	V_{OSDDCR}	—	(Note T_{30})	2.3	2.5	2.7	V
	V_{OSDDCG}	—		2.3	2.5	2.7	
	V_{OSDDCB}	—		2.3	2.5	2.7	
Analog OSD mode ON voltage	V_{OSDON}	—	Pin 21	2.05	2.30	2.55	V

Characteristics	Symbol	Test Circuit	Test Condition	Min	Typ.	Max	Unit
OSD ACL characteristic	OSDACL1	—	(Note T_{31})	—	0	—	dB
	OSDACL2	—		—	0	—	
	OSDACL3	—		−6.5	−4.5	−2.5	
	OSDACL4	—		−16.5	−15	−13.5	
Crosstalk of RGB inputs	GCT	—	—	—	−50	−45	dB

Color Difference Section

Characteristics		Symbol	Test Circuit	Test Condition	Min	Typ.	Max	Unit
Color difference signal contrast control characteristic		$vuCY_{MAX}$	—	(Note A_1)	1.5	1.8	2.13	V_{p-p}
		$vuCY_{CNT}$	—		0.85	1.0	1.2	
		$vuCY_{MIN}$	—		0.24	0.29	0.355	
		ΔvuCY	—		14.0	15.5	17.0	dB
Color control characteristic		$vuCY_{MAX}$	—	(Note A_2)	1.18	1.4	1.68	V_{p-p}
		$vuCY_{CNT}$	—		0.73	0.86	1.04	
		$vuCY_{MIN}$	—		0.076	0.090	0.108	
		ΔvuCY+	—		3	4	5	dB
		ΔvuCY−	—		−20	−18	−16	
R-Y relative phase	00	θR_{90}	—	—	88	90	92	°
	01	θR_{93}	—		90	92	94	
	10	θR_{96}	—		92	94	96	
	11	θ_{112}	—		109	111	113	
R-Y relative amplitude	00	$vR_{56/vB}$	—	—	0.55	0.58	0.61	times
	01	$vR_{68/vB}$	—		0.67	0.7	0.73	
	10	$vR_{76/vB}$	—		0.78	0.81	0.84	
	11	$vR_{84/vB}$	—		0.85	0.88	0.91	
G-Y relative phase	00	θG_{236}	—	—	234	237	240	°
	01	θG_{240}	—		238	241	244	
	10	θG_{244}	—		242	245	248	
	11	θG_{253}	—		251	254	257	
G-Y relative amplitude	00	$vG_{30/vB}$	—	—	0.275	0.300	0.325	times
	01	$vG_{325/vB}$	—		0.300	0.325	0.350	
	10	$vG_{35/vB}$	—		0.325	0.350	0.375	
	11	$Gv_{375/vB}$	—		0.350	0.375	0.400	
Color difference half-tone gain	R	GHT_{RY}	—	(Note A_3)	0.47	0.50	0.53	times
	G	GHT_{GY}	—		0.47	0.50	0.53	
	B	GHT_{BY}	—		0.47	0.50	0.53	
Color γ characteristic		Vγ1	—	(Note A_4)	0.09	0.23	0.37	V_{p-p}
		Vγ2	—		0.23	0.37	0.51	
		Vγ3	—		0.38	0.52	0.66	
		Δγ	—		0.65	0.75	0.85	—
Color limiter characteristic		CLT0	—	(Note A_5)	1.45	1.65	1.85	V_{p-p}
		CLT1	—		1.8	2.0	2.2	
High bright color gain		HBC1	—	(Note A_6)	0.02	0.04	0.06	times

Characteristics		Symbol	Test Circuit	Test Condition	Min	Typ.	Max	Unit
Base band tint control characteristic	Max	θTR_{MAX}	—	R	29	33	37	°
		θTB_{MAX}	—	B	29	33	37	
	Min	θTR_{MIN}	—	R	−37	−33	−29	
		θTB_{MIN}	—	B	−37	−33	−29	
Flesh color characteristic		Fa33	—	(Note A_7)	0.38	0.48	0.58	—
Color difference signal input dynamic range		DR_{R-Y}	—	—	0.9	1.2	1.5	V_{p-p}
		DR_{B-Y}	—		0.9	1.2	1.5	
Color detail emphasis characteristic		GCD0	—	(Note A_8)	15.0	18.0	21.0	V_{p-p}
		GCD1	—		—	−15.0	0.0	
Phase shift at IQ → UV conversion		$\theta_{I \rightarrow U}$	—	—	31	33	35	°
		$\theta_{Q \rightarrow V}$	—		31	33	35	

DEF Section

Characteristics		Symbol	Test Circuit	Test Condition	Min	Typ.	Max	Unit
$32f_H$ VCO oscillation start voltage		V_{VCO}	—	DEF V_{CC} Voltage	3.1	3.4	3.7	V
Horizontal output start voltage		VH_{ON23}	—		4.7	5.0	5.3	V
Horizontal output duty cycle		T_{23}	—	Pin 41	38.5	40.5	42.5	%
Horizontal output free-run frequency		f_{H050}	—	Vertical freq.; Auto	15475	15625	15775	Hz
		f_{H060}	—	Vertical freq.; 60 Hz	15585	15734	15885	
Variable range of horizontal output frequency		f_{HMIN}	—	Variable pin 45 voltage	14700	15000	15300	Hz
		f_{HMAX}	—		16500	16700	16900	
Horizontal output frequency control sensitivity		βH	—	(Note D_1)	180	230	280	Hz/ 0.1 V
Horizontal output voltage	High level	V_{H23}	—	Pin 40	2.7	3.0	3.3	V
	Low level	V_{L23}	—		—	0.15	0.30	
Horizontal output phase		SPH1	—	(Note D_2)	11.1	11.3	11.5	V
		SPH2	—		0.35	0.45	0.55	
		SPH3	—		0.11	0.21	0.31	
Curve correction characteristic		ΔH_{24}	—	(Note D_3)	2.3	2.5	2.7	V
Variable range of horizontal picture position		ΔH_{SFT}	—	(Note D_4)	5.7	6.2	6.7	V
Clamp pulse start phase		CP_S	—	(Note D_5)	2.8	2.9	3.1	V
Clamp pulse width		CP_W	—		1.0	1.2	1.4	V
Threshold of external clamp pulse input		CP_{V30}	—	Pin 40	3.3	3.6	3.9	V
Threshold of external clamp mode switching		CPM_{V23}	—	Pin 41	8.5	8.7	8.9	V
Threshold of external black peak hold stopping pulse		BPv17	—	Pin 49, at normal scan	0.9	1.1	1.3	—
		BPv24	—	Pin 40, at doble scan	0.9	1.1	1.3	
SPC gate pulse start phase		GP_S	—	(Note D_6)	1.9	2.1	2.3	μs
SPC gate pulse width		GP_W	—		1.9	2.1	2.3	μs

Characteristics		Symbol	Test Circuit	Test Condition	Min	Typ.	Max	Unit
SPC horizontal blanking pulse start phase		HP_S	—	(Note D_7)	4.6	4.8	5.0	μs
SPC horizontal blanking pulse pulse width		HP_{W50}	—		9.9	10.4	10.9	μs
		HP_{W60}	—		10.5	11.0	11.5	
HD output start phase		HD_S	—	(Note D_8)	0.7	0.9	1.1	μs
HD output pulse width		HD_W	—		0.7	0.9	1.1	μs
HD output voltage		VH_D	—		4.5	4.8	5.1	V
Threshold of AFC-2 detection		V_{HBLK1}	—	Pin 38, at normal scan	3.2	3.5	3.8	V
Threshold of horizontal timing		V_{HBLK2}	—	Pin 38, at doble scan	3.2	3.5	3.8	V
Threshold of blanking pulse		V_{HBLK3}	—	Pin 38, H/V blanking	0.8	1.1	1.4	V
Vertical blanking pulse start phase		VP_{50S1}	—	(Note D_9)	46	48	50	μs
Vertical blanking pulse stop phase		VP_{50S2}	—		—	23	—	H
Vertical blanking pulse start phase		VP_{60S1}	—	(Note D_{10})	46	48	50	μs
Vertical blanking pulse stop phase		VP_{60S2}	—		—	21	—	H
External blanking threshold current	353H	ABLK	—	Pin 30 input current	150	300	400	μA
	297H							
Vertical output start voltage	High level	V_{ON}	—	DEF V_{CC} voltage	4.7	5.0	5.3	V
	Low level							
Vertical output Free-run frequency		f_{V050}	—	Vertical freq.; Auto	40	45	50	Hz
		f_{V060}	—	Vertical freq.; 60 Hz	48	53	58	
Vertical output voltage		V_{VH}	—	Pin 29	4.7	5.0	5.3	V
		V_{VL}	—		—	0.0	0.3	
Vertical pull-in range (1)		f_{PL1}	—	(Note D_{11})	—	224.5	—	H
		f_{PH1}	—		—	353	—	
Vertical pull-in range (2)		f_{PL2}	—		—	224.5	—	H
		f_{PH2}	—		—	297	—	
Vertical pull-in range (3)		f_{50P}	—		—	288.5	—	H
Vertical pull-in range (4)		f_{60P}	—		—	288	—	H
RGB vertical blanking pulse start phase (1)		VR_{50S1}	—	(Note D_{12})	44	46	48	μs
		VG_{50S1}	—		44	46	48	
		VB_{50S1}	—		44	46	48	
RGB vertical blanking pulse stop phase (1)		VR_{50S2}	—		—	19	—	H
		VG_{50S2}	—		—	19	—	
		VB_{50S2}	—		—	19	—	
RGB vertical blanking pulse start phase (2)		VR_{60S1}	—	(Note D_{13})	44	46	48	μs
		VG_{60S1}	—		44	46	48	
		VB_{60S1}	—		44	46	48	
RGB vertical blanking pulse stop phase (2)		VR_{60S2}	—		—	17	—	H
		VG_{60S2}	—		—	17	—	
		VB_{60S2}	—		—	17	—	

Test Conditions

Note	Parameter	Test Conditions (unless otherwise stated, V_{CC1} = 5 V, V_{CC2}/V_{CC3}/DEF V_{CC} = 9 V, Ta = 25 ± 3°C)				
		Switching Mode				Test Conditions
		SW_{15}	SW_{49}	SW_{50}	SW_{53}	
	Video Block					Video block common test conditions 1) SW_{13}: A, SW_{18}: ON, SW_{20}: ON, SW_{23}: ON, SW_{33}: A, SW_{34}: A, SW_{35}: A, SW_{37}: A, SW_{38}: A, SW_{39}: A, SW_{46}: ON, SW_{51}: B, SW_{52}: B 2) For testing, see the picture sharpness AC characteristics testing circuit diagram. After using the preset values to transmit the BUS control data, set ACB operation switching to ACB off (01). 3) Ensure the composite signal is always input to pin 52 (Y_1/sync input).
V_1	Black Detect Level Shift	C	OFF	C	C	1) Set the BUS control data to the preset value. 2) Connect pin 78 to an external power supply (PS) and observe pin 2. 3) Turn the Y mute off (1), turn the black stretch gain off (1), and set the black detect level to 0 IRE (1). 4) Increase the PS voltage from 5 V and measure the DC differential VB of pin 3 where the picture period (high period) of pin 2 goes low. 5) Set the black detect level to 3 IRE (0). 6) As in 4), measure the DC differential VB3 of pin 3. 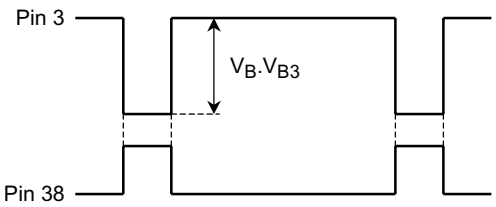
V_2	Black Stretch Amp Maximum Gain	↑	↑	A	A	1) Set the BUS control data to the preset value. 2) Set SW50 to A (maximum gain) and input a 500 kHz sine wave to TP78. 3) Use pin 78 to adjust the signal amplitude to 0.1 V_{p-p}. 4) Turn the Y mute off (1), turn the black stretch gain off (1), and measure the amplitude VA of pin 3. 5) Turn the black stretch gain on (0) and measure the amplitude VB of pin 3. 6) Calculate the G_{BS} using the following formula. G_{BS} = VB ÷ VA

Note	Parameter	Test Conditions (unless otherwise stated, V_{CC1} = 5 V, V_{CC2}/V_{CC3}/DEF V_{CC} = 9 V, Ta = 25 ± 3°C)				
		Switching Mode				Test Conditions
		SW_{15}	SW_{49}	SW_{50}	SW_{53}	
V_3	Black Stretch Start Point (1)	C	OFF	A	C	1) Set the BUS control data to the preset value. 2) Set SW_{50} to A (maximum gain), turn the Y mute off (1), and turn the black stretch gain off. 3) Connect pin 78 to an external power supply (PS), increase the voltage from V_{53}, and plot the resulting change in voltage S_1 of pin 3. 4) Next, turn the black stretch gain on (0), set the black stretch point 1 to the minimum (000), increase the PS voltage from V_{53} as in 3), and plot the resulting change in voltage S_2 of pin 3. 5) Set the black stretch point 1 to the maximum (111), increase the PS voltage from V_{53} as in 3), and plot the change in voltage S_3 of pin 3. 6) Use the diagram below to calculate the intersections V_{BST1} and V_{BST2} of S_1, S_2, and S_3. Use the following formulas to calculate P_{BST1} and P_{BST2}. P_{BST1} [(IRE)] = ((V_{BST1} [V] − V_{49} [V] ÷ 1.4 [V]) × 100 [(IRE)] P_{BST2} [(IRE)] = ((V_{BST2} [V] − V_{49} [V] ÷ 1.4 [V]) × 100 [(IRE)] 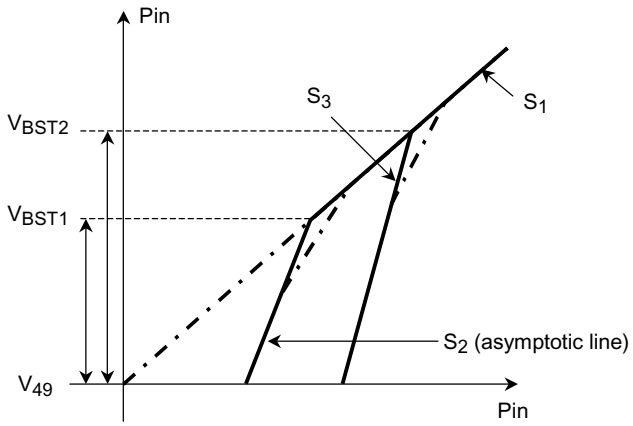

Note	Parameter	Test Conditions (unless otherwise stated, V_{CC1} = 5 V, V_{CC2}/V_{CC3}/DEF V_{CC} = 9 V, Ta = 25 ± 3°C)				
		Switching Mode				Test Conditions
		SW_{15}	SW_{49}	SW_{50}	SW_{53}	
V_4	Black Stretch Start Point (2)	C	ON	A	A	1) Set the BUS control data to the preset value. 2) Turn the black stretch gain off (1), turn the Y mute off (1), and turn the video mute off (0). Input the TG7 linearity to TP53, use pin 78 to adjust the amplitude as in the diagram, set unicolor to the center (1000000), and measure the resulting amplitude (V_{43}) of pin 11 (R OUT). 3) Turn the black stretch gain on (0), connect pin 3 to an external power supply (PS), and measure pin 11 (R OUT). 4) When the black stretch start point 2 data are at the minimum (000), calculate as in the diagram the black stretch start point differential ΔV_{000} for when P is V_{49} (APL 0%) and for when P is V_{49} + 1.0 [V] (APL 100%). 5) Next, when the black stretch start point 2 data are maximum (111), calculate differential ΔV_{111} in the same way. 6) Calculate the following formulas. $P_{BS1} = (\Delta V_{000}/V_{43}) \times 100$ $P_{BS2} = (\Delta V_{111}/V_{43}) \times 100$ 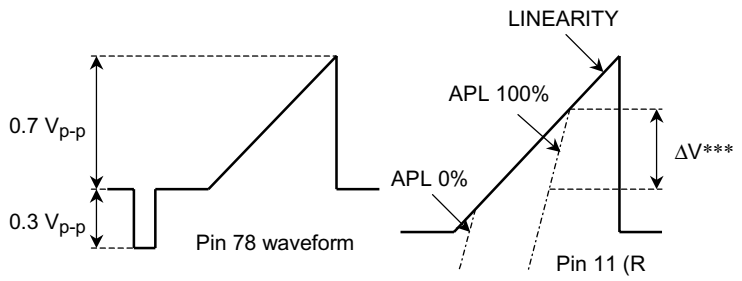

Note	Parameter	Test Conditions (unless otherwise stated, V_{CC1} = 5 V, V_{CC2}/V_{CC3}/DEF V_{CC} = 9 V, Ta = 25 ± 3°C)				
		Switching Mode				Test Conditions
		SW_{15}	SW_{49}	SW_{50}	SW_{53}	
V_5	D.ABL Detect Voltage	C	OFF	A	C	1) Set the BUS control data to the preset value. 2) Turn the Y mute off (1), set the ABL sensitivity to the minimum (000), set the D.ABL sensitivity to the maximum (111), and turn the black stretch gain off (1). 3) Connect pin 8 to an external power supply (PS) and decrease the voltage from 6.5 V. 4) Repeat 3) when the D.ABL detect voltage bus data are 000, 001, 010, and 100 respectively. Measure PS voltages V_{000}, V_{001}, V_{010}, and V_{100} when the picture period of pin 3 changes to low. (enlarge the range before measuring.) 5) Next, calculate the ΔV_{001}, ΔV_{010}, and ΔV_{100} voltage differentials from V_{000} and V_{001}, V_{010}, and V_{100}. $\Delta V_{***} = V_{000} - V_{001}$ (V_{010}, V_{100}) 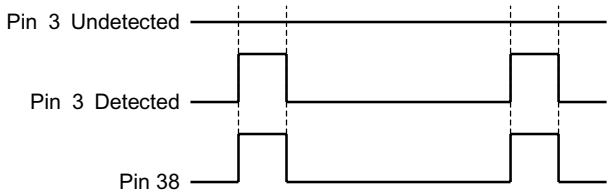

Note	Parameter	Test Conditions (unless otherwise stated, V_{CC1} = 5 V, V_{CC2}/V_{CC3}/DEF V_{CC} = 9 V, Ta = 25 ± 3°C)				
		Switching Mode				Test Conditions
		SW_{15}	SW_{49}	SW_{50}	SW_{53}	
V_6	D.ABL Sensitivity	C	ON	A	C	1) Set the BUS control data to the preset value. 2) Turn the Y mute off (1), turn the black stretch gain off (1), and connect pin 8 to an external power supply. 3) With the D.ABL detect voltage at the minimum (000), plot the voltage characteristics of pin 3 in relation to the voltage of pin 8 when D.ABL sensitivity is at the minimum (000) and the maximum (111). 4) From the diagram, calculate the S_{DAMIN} and S_{DAMAX} gradients. S_{DAMIN}, $S_{DAMAX} = \Delta Y/\Delta X$ 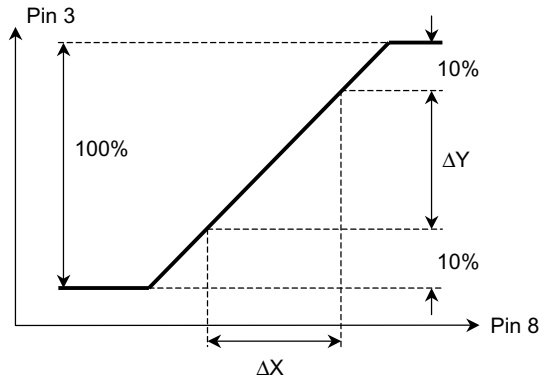
V_7	Black Level Compensation	↑	OFF	↑	↑	1) Set the BUS control data to the preset value. 2) Turn the Y mute off (1), turn the black stretch gain off (1), and observe pin 3. 3) Turn the black level compensation on (1), measure ΔV_1 [mV], and calculate the following formula. $B_{LC} = (\Delta V_1/1.4 \times 10^3) \times 100$ (IRE) 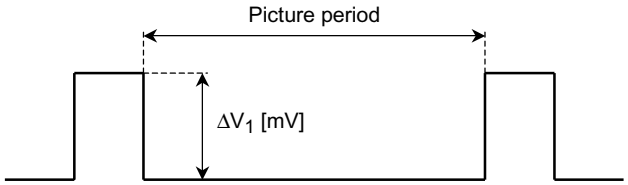

Note	Parameter	Test Conditions (unless otherwise stated, V_{CC1} = 5 V, V_{CC2}/V_{CC3}/DEF V_{CC} = 9 V, Ta = 25 ± 3°C)				
		Switching Mode				Test Conditions
		SW_{15}	SW_{49}	SW_{50}	SW_{53}	
V_8	Black Peak Detect Level	C	ON	C	C	1) Set the BUS control data to the preset value. 2) Measure the DC voltage V_{49} of pin 3. 3) Connect pin 78 to an external power supply (PS). 4) Turn the Y mute off (1), the black stretch gain off (1), and set the black detect level shift to 0 IRE (1). 5) Increase the PS from 0 V and measure the voltage V_{BP} of pin 3 where the DC level of the picture period of pin 2 shifts from high to low. 6) Calculate ΔV_{BP} from the following formula. $\Delta V_{BP} = V_{BP} - V_{49}$
V_9	DC Transmission Rate Compensation Gain	C	ON	B	C	1) Set the BUS control data to the preset value. 2) Turn the Y mute off (1), turn the video mute off (0), and connect pin 78 to an external power supply (PS). 3) Measure the amplitude V_{43} of pin 11, set the PS to V_{53} + 0.7 V, and adjust V_{43} to 0.7 V_{p-p} using unicolor. 4) With the DC transmission rate compensation gain at the minimum (000), measure ΔV_1 and ΔV_2 as in the diagram below. 5) Next, with the DC transmission rate compensation gain at the maximum (111), measure ΔV_3 and ΔV_4. 6) Calculate ADT100 and ADT130 from the following formula. ADT100 = (ΔV_2 [V] − ΔV_1 [V]) ÷ 0.1 [V] ADT130 = (ΔV_4 [V] − ΔV_3 [V]) ÷ 0.1 [V] 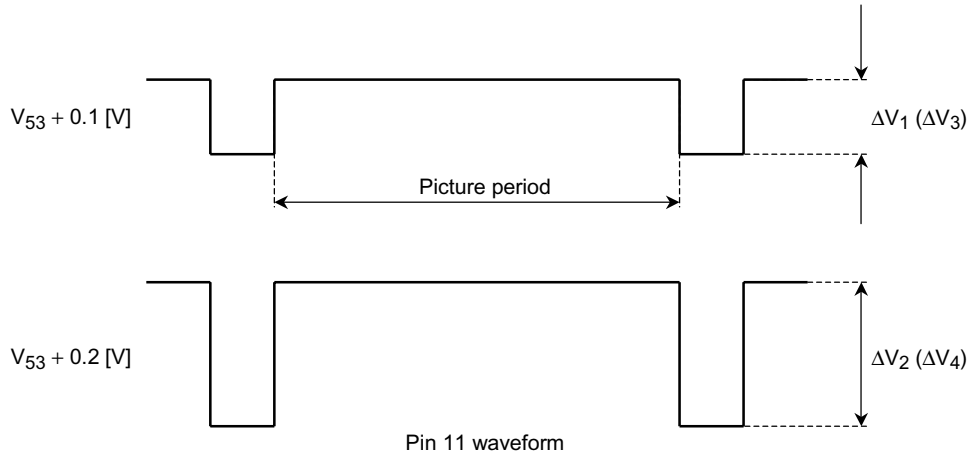

Note	Parameter	Test Conditions (unless otherwise stated, V_{CC1} = 5 V, V_{CC2}/V_{CC3}/DEF V_{CC} = 9 V, Ta = 25 ± 3°C)				
		Switching Mode				Test Conditions
		SW_{15}	SW_{49}	SW_{50}	SW_{53}	
V_{10}	DC Transmission Compensation Start Point	C	ON	B	C	1) Repeat steps 1) and 2) of V_{21}. 2) Measure the amplitude V_{43} of pin 11, set the PS to V_{53} + 0.7 V, and adjust V_{43} to around 1.0 V_{p-p} using unicolor. 3) With the DC transmission compensation rate at the minimum (000), increase PS from V_{53} and plot the relationship between the voltages of pins 3 and 11. 4) Next, with the DC transmission compensation rate at the maximum (111), increase PS from V_{53} and plot the relationship between the voltages of pins 3 and 11. 5) With the DC transmission compensation rate at the maximum (111), increase the PS from V_{53} when the DC transmission compensation start point reaches the maximum (111) and plot the relationship between the voltages of pins 3 and 11. 6) Calculate V_{DT0} and V_{DT42} from the following formula. $V_{DT0} = ((V_{SP0} - V_{49})/1\ [V]) \times 100\ [\%]$ $V_{DT42} = ((V_{SP42} - V_{49})/1\ [V]) \times 100\ [\%]$ 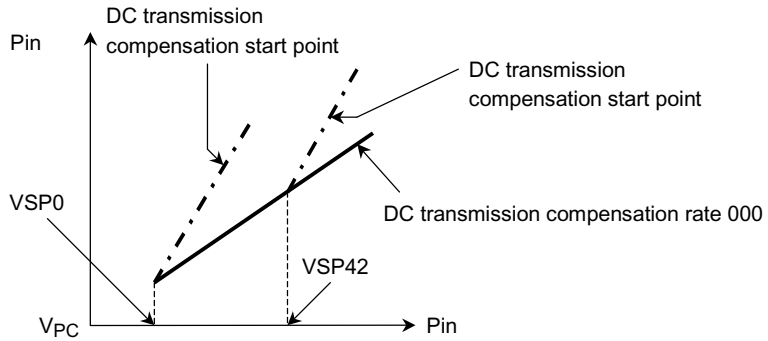

Note	Parameter	Test Conditions (unless otherwise stated, V_{CC1} = 5 V, V_{CC2}/V_{CC3}/DEF V_{CC} = 9 V, Ta = 25 ± 3°C)				
		Switching Mode				Test Conditions
		SW_{15}	SW_{49}	SW_{50}	SW_{53}	
V_{11}	DC Transmission Compensation Limit Point	C	ON	B	C	1) Set the BUS control data to the preset value. 2) Turn the Y mute off (1), turn the video mute off (0), and with the unicolor set at maximum (1111111), connect pin 3 to an external power supply (PS). 3) Set the DC transmission compensation rate to the maximum (111). 4) Increase the PS from 5 V, observe pin 11, and plot the DC transmission compensation rate. 5) Repeat 4) above but change the DC transmission compensation limit point data. Calculate P_{DTL60}, P_{DTL73}, P_{DTL87}, and P_{DTL100} from the measured data and the following formulas. $P_{DTL60} = ((V_{L60} - V_{49})/1.0) \times 100$ [%] $P_{DTL73} = ((V_{L73} - V_{49})/1.0) \times 100$ [%] $P_{DTL87} = ((V_{L87} - V_{49})/1.0) \times 100$ [%] $P_{DTL100} = ((V_{L100} - V_{49})/1.0) \times 100$ [%] 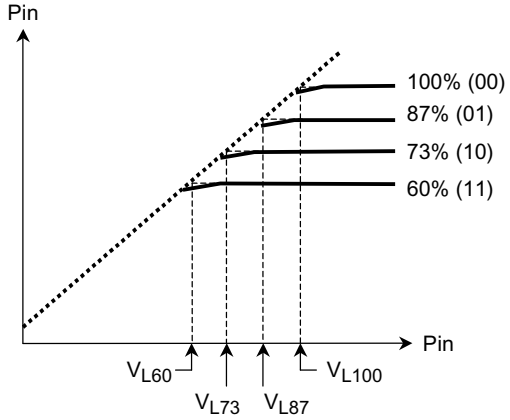

Note	Parameter	Test Conditions (unless otherwise stated, V_{CC1} = 5 V, V_{CC2}/V_{CC3}/DEF V_{CC} = 9 V, Ta = 25 ± 3°C)				
		Switching Mode				Test Conditions
		SW_{15}	SW_{49}	SW_{50}	SW_{53}	
V_{12}	Picture Sharpness Control Range	C	OFF	B	A	1) Set the BUS control data to the preset value. 2) Input a sine wave to TP78. 3) Set the amplitude of pin 78 to 20 mV_{p-p}. 4) Set the unicolor to the maximum (1111111), set SHR tracking to SRT-gain low (11), and set the aperture compensator peak frequency to 4.2M (001). 5) Turn the Y mute off (1), the video mute off (0), connect TP11 and TP15b, and observe TP15a. 6) Set the picture sharpness to the maximum (1111111). When the frequencies are 100 kHz and F_{APL01}, measure the V_{100} and V_L amplitudes respectively and calculate G_{MAXL} by the formula shown below. 7) Next, set the picture sharpness to the minimum (0000000). As in 6), when the frequencies are 100 kHz and 2.4 MHz, measure the V_{100} and V_L amplitudes respectively and calculate G_{MINL} by the formula shown below. 8) Set the aperture compensator peak frequency to 7.7M (111) and the picture sharpness to the maximum (1111111). When the frequencies are 100 kHz and F_{APH11}, measure the V_{100} and V_H amplitudes respectively and calculate G_{MAXH} by the formula shown below. 9) Next, set the picture sharpness to the minimum (0000000). When the frequencies are 100 kHz and 4 MHz, measure the V_{100} and V_H amplitudes respectively and calculate G_{MINH} by the following formula. G_{****} [dB] = 20 × Log ($V_{L\ (H)}$ ÷ V_{100})
V_{13}	YNR Characteristics	↑	↑	↑	↑	1) Repeat steps 1) to 5) of V_{12}. 2) With YNR on (1) and the picture sharpness at minimum (0000000), measure the TP15a amplitudes V_{100} and V_L when the input signal frequencies are 100 kHz and 2.4 MHz respectively. 3) Next, set the aperture compensator peak frequency to 7.7M (111). When the input signal frequencies are 100 kHz and 4 MHz, measure the V_{100} and V_H amplitudes respectively and calculate G_{YL} and G_{YH} by the following formula. $G_{YL\ (H)}$ [dB] = 20 × Log ($V_{L\ (H)}$ ÷ V_{100})

Note	Parameter	Test Conditions (unless otherwise stated, V_{CC1} = 5 V, V_{CC2}/V_{CC3}/DEF V_{CC} = 9 V, Ta = 25 ± 3°C)				
		Switching Mode				Test Conditions
		SW_{15}	SW_{49}	SW_{50}	SW_{53}	
V_{14}	2T Pulse Response SRT Control	C	ON	B	A	1) Set the BUS control data to the preset value. 2) Input a 2T pulse (STD) signal to TP78, turn the Y mute off (1), turn the video mute off (0), set unicolor to maximum (1111111), and set SHR tracking to SRT-gain low (11). 3) Set the sharpness control to the center (1000000), set the aperture compensator peak frequency to 4.2M (001), connect TP11 and TP15b, and observe TP15a. 4) Measure T_{SL1} as in the diagram below. 5) Set SHR tracking to SRT-gain high (00) and measure T_{SL2}. 6) Next, set the aperture compensator peak frequency to 7.7M (111) and measure T_{SH1} and T_{SH2} as above. 7) Calculate the following formula. $T_{SRTL} = T_{SL1} - T_{SL2}$ $T_{SRTH} = T_{SH1} - T_{SH2}$ 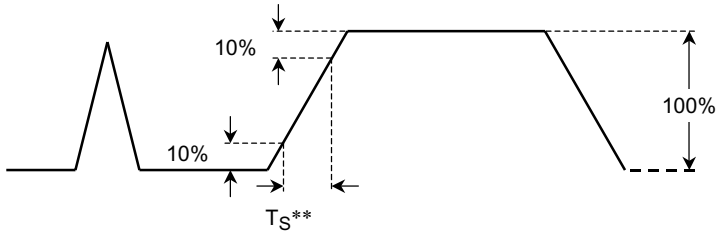

Note	Parameter	Test Conditions (unless otherwise stated, V_{CC1} = 5 V, V_{CC2}/V_{CC3}/DEF V_{CC} = 9 V, Ta = 25 ± 3°C)				
		Switching Mode				Test Conditions
		SW_{15}	SW_{49}	SW_{50}	SW_{53}	
V_{15}	VSM Gain	C	ON	B	A	1) Set the BUS control data to the preset value. 2) Input the frequency F_{VL} sine wave to TP78. 3) Turn the Y mute off (1), turn the video mute off (0), set the aperture compensator peak frequency to 4.2M (001), and set the amplitude of pin 78 to 0.1 V_{p-p}. 4) Measure the TP5 amplitudes V_{L00}, V_{L01}, V_{L10}, and V_{L11} in the following cases. VSM gain 0dB (00) → $V_{L\ (H)\ 00}$ −6dB (01) → $V_{L\ (H)\ 01}$ −9dB (10) → $V_{L\ (H)\ 10}$ OFF (11) → $V_{L\ (H)\ 11}$ 5) Input the sine wave of frequency F_{VH} to TP78, set the aperture compensator peak frequency to 7.7M (111), and measure the TP5 amplitudes V_{H00}, V_{H01}, V_{H10}, and V_{H11} as above. 6) Calculate the following formulas. $G_{VL\ (H)\ 00} = 20 \times \mathrm{Log}\ (V_{L\ (H)\ 00}/0.1)$ [dB] $G_{VL\ (H)\ 01} = 20 \times \mathrm{Log}\ (V_{L\ (H)\ 01}/0.1)$ [dB] − $20 \times \mathrm{Log}\ (V_{L\ (H)\ 00}/0.1)$ [dB] $G_{VL\ (H)\ 10} = 20 \times \mathrm{Log}\ (V_{L\ (H)\ 10}/0.1)$ [dB] − $20 \times \mathrm{Log}\ (V_{L\ (H)\ 00}/0.1)$ [dB] $G_{VL\ (H)\ 11} = 20 \times \mathrm{Log}\ (V_{L\ (H)\ 00}/0.1)$ [dB]

Note	Parameter	Test Conditions (unless otherwise stated, V_{CC1} = 5 V, V_{CC2}/V_{CC3}/DEF V_{CC} = 9 V, Ta = 25 ± 3°C)				
		Switching Mode				Test Conditions
		SW_{15}	SW_{49}	SW_{50}	SW_{53}	
V_{16}	VSM Horizontal Parabola Modulation Gain	C	ON	B	A	1) Repeat steps 1) to 3) of V_{15}. 2) Turn on the VSM output horizontal parabola modulation (1) and set the VSM gain to 0dB (00). 3) As in the diagram, measure the picture period amplitudes VCL, VRL, and VLL of TP5. 4) Next, input the sine wave of frequency F_{VH} to TP78, set the aperture compensator peak frequency to 7.7M (111), set the VSM horizontal parabola frequency to 31.5k (10), and measure the picture period amplitudes VCH, VRH, and VLH of TP5 as above. 5) Calculate G_{VRL}, G_{VLL}, G_{VRH}, and G_{VLH} from the following formulas. $G_{VRL\ (H)} = 20 \times \mathrm{Log}\ (VRL\ (H)/VCL\ (H))$ $G_{VLL\ (H)} = 20 \times \mathrm{Log}\ (VLL\ (H)/VCL\ (H))$ 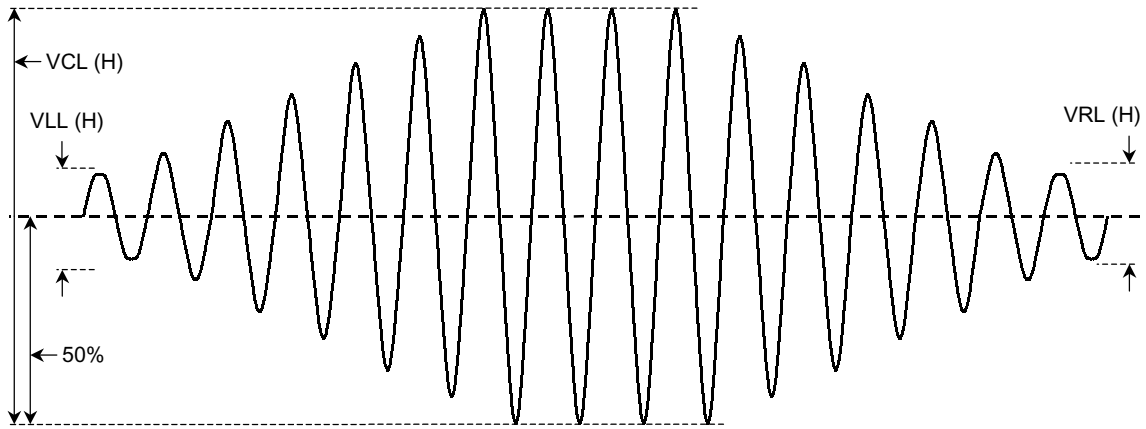 6) In 3) and 4) above, turn the VSM output horizontal parabola modulation off (0) and check that no parabola modulation is generated on the picture period signal. (VPOFL, VPOFH)

Note	Parameter	Test Conditions (unless otherwise stated, V_{CC1} = 5 V, V_{CC2}/V_{CC3}/DEF V_{CC} = 9 V, Ta = 25 ± 3°C)				
		Switching Mode				Test Conditions
		SW_{15}	SW_{49}	SW_{50}	SW_{53}	
V_{17}	VSM High-Speed Mute Response Time	C	ON	B	A	1) Repeat steps 1) to 3) of V_{15}, then observe pin 5. 2) Input a pulse like that shown below to pin 27 and measure the response time T_{VML1} (2) at that input. 3) Similarly, input the pulse to pin 21 and measure the response time T_{VML3} (4) at that input. 4) Input the sine wave of frequency F_{VH} to TP78, set the aperture compensator peak frequency to 7.7M (111), and measure the response time T_{VMH1} (2) as in 2) above. 5) Similarly, input the pulse to pin 21 and measure the response time T_{VMH3} (4) at the input. 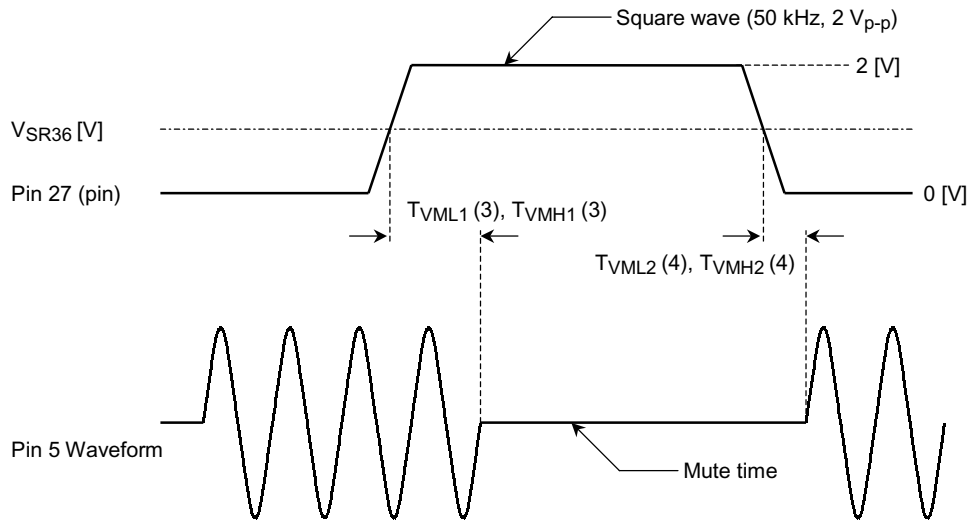

Note	Parameter	Test Conditions (unless otherwise stated, V_{CC1} = 5 V, V_{CC2}/V_{CC3}/DEF V_{CC} = 9 V, Ta = 25 ± 3°C)								
		Subaddress				Switching Mode				Test Conditions
		07	10	17	18	SW_5	SW_6	SW_{13}	SW_{15}	
	Chroma Block									Chroma block common test conditions SW_{13}: B, SW_{15}: C, SW_{18}: ON, SW_{20}: ON, SW_{23}: ON, SW_{24}: ON, SW_{25}: ON, SW_{33}: A, SW_{34}: A, SW_{35}: A, SW_{37}: A, SW_{38}: A, SW_{39}: A, SW_{46}: ON
C_1	ACC Characteristics	80	00	00	00	OPEN	OPEN	B	A	1) Input 3.58-NTSC rainbow signal (C-4 signal) burst/chroma signals with the same burst/chroma amplitude to the chroma input pin (TP54). 2) Measure the output amplitudes F_{10}, F_{30}, F_{300}, and F_{600} of the UQ output pin 65 when the chroma input amplitude levels are set to 10, 30, 300, and 600 mV_{p-p}. 3) Calculate $A = F_{30}/F_{300}$.
C_2	APC Frequency Control Sensitivity	↑	↑	↑	↑	↑	↑	A	↑	1) Connect SW_{13} to A. 2) Switch the color system mode (10) to 3.58 NTSC (00), 4.43 PAL (60), and M-PAL (80) and measure the following for each of those cases. 3) Connect external voltage source (V_{11}) to APC filter pin 58. 4) Vary the voltage of the external voltage source (V_{11}) and observe the f_{sc} output pin 72 using a frequency counter. 5) Measure the free-run sensitivity β for the $V_{11} + \Delta V_{11}$ (100 mV) near the f_c. (3.5 NTSC = β_3, 4.3; PAL = β_4; M-PAL = β_M)
C_3	APC Pull-In and Hold Range	↑	↑	↑	↑	↑	↑	↑	↑	1) Input 3.579545 MHz, 4.433619 MHz, and 3.575611 MHz continuous waves (200 mV_{p-p} to the chroma input pin (TP54). 2) Switch the color system mode (10) to 3.58 NTSC (00), 4.43 PAL (60), and M-PAL (80), and measure the following for each of those cases. 3) Vary the input signal frequency in 10 Hz-steps within a range of ±3 kHz. 4) Clamp B/W → color mode (f*P*). While holding color → B/W mode (f*H*), measure the ± deviations from the frequency at each continuous wave input.
C_4	SECAM Output DC Level Change	80	C_0	00 or 30 or 60	00	OPEN	OPEN	A	A	1) Connect SW_{13} to A. 2) Measure the output DC level of the SECAM control pin 3 when the color system mode (10) is switched to 3.58 NTSC (00), 4.43 PAL (30), and SECAM (60). (3.58 NTSC mode: SEN) (4.43 PAL mode: SEP) (SECAM mode: SES)

Note	Parameter	Test Conditions (unless otherwise stated, V_{CC1} = 5 V, V_{CC2}/V_{CC3}/DEF V_{CC} = 9 V, Ta = 25 ± 3°C)								
		Subaddress				Switching Mode				Test Conditions
		07	10	17	18	SW_5	SW_6	SW_{13}	SW_{15}	
C_5	NTSC Ident Sensitivity	↑	C_0 or D_0	00	↑	↑	↑	B	↑	1) Input a 3.58-NTSC rainbow (C-4 signal) burst/chroma signal with the same burst/chroma amplitudes to the chroma input pin (TP54). 2) Observe the BUS READ mode (5th and 6th bits of the 1st byte). 3) Switch the Indent sensitivity (set the subaddress (10) data low (C_0) and high (D_0)) and perform the following measurements. 4) Increase the input signal amplitude from 0 and measure the input signal amplitude at the switch to 3.58 NTSC mode. (LOW (C_0): vN_{CL}, High (D_0): vN_{CH}) 5) Lower the input signal amplitude from 100 mV_{p-p} and measure the input signal amplitude at the deviation from 3.58 NTSC mode. (LOW (C_0): vN_{BL}, High (D_0): vN_{BH})
C_6	PAL Ident Sensitivity	80	C_0 or D_0	00	00	OPEN	OPEN	B	A	1) Input a 4.43-PAL rainbow (C-4 signal) burst/chroma signal with the same burst/chroma amplitude to the chroma input pin (TP54). 2) Observe the BUS READ mode (5th and 6th bits of the 1st byte). 3) Switch the Indent sensitivity (set the subaddress (10) data low (C_0) and high (D_0)) and perform the following measurements. 4) Increase the input signal amplitude from 0 and measure the input signal amplitude at the switch to 4.43 PAL mode. (LOW (C_0): vP_{CL}, High (D_0): vP_{CH}) 5) Lower the input signal amplitude from 100 mV_{p-p} and measure the input signal amplitude at the deviation from 4.43 PAL mode. (LOW (C_0): vP_{BL}, High (D_0): vP_{BH})
C_7	TOF Characteristics	↑	00 or 60	↑	38	↑	↑	↑	↑	1) Input the signal C-1 to the chroma input pin (TP54). (signal amplitude = 50 mV_{p-p}). 2) When the subaddress (10) data are f_0 = 3.58 MHz (00) and f_0 = 4.43 MHz (60), and subaddress (18) data are (38), connect 1.5 kΩ between the V_I output pin 6 and the 5 V-V_{CC} and observe the V_I output pin 64. 3) Measure the output amplitude when f_0 = 3.58 MHz and calculate the gain in decibels from the input (GF_{C3}). 4) Measure the output amplitude when f_0 = 3.58 MHz ± 500 kHz and calculate the gain in decibels from the input (+500 kHz: GF_{H3}, –500 kHz: GF_{L3}). 5) Measure the output amplitude when f_0 = 4.43 MHz and calculate the gain in decibels from the input (GF_{C4}). 6) Measure the output amplitude when f_0 = 4.43 MHz ± 500 kHz and calculate the gain in decibels from the input (+500 kHz: GF_{H4}, –500 kHz: GF_{L4}).

Note	Parameter	Test Conditions (unless otherwise stated, V_{CC1} = 5 V, V_{CC2}/V_{CC3}/DEF V_{CC} = 9 V, Ta = 25 ± 3°C)									
		Switching Mode									Test Conditions
		SW_{33}	SW_{34}	SW_{35}	SW_{37}	SW_{38}	SW_{39}	SW_{51}	SW_{52}	SW_{53}	
	Text Block										Text block common test conditions SW_{13}: A, SW_{15}: C, SW_{18}: ON, SW_{20}: ON, SW_{23}: ON, SW_{24}: ON, SW_{25}: ON
T_1	AC Gain	A	A	A	A	A	A	B	B	A	1) Input signal 1 (f_0 = 100 kHz, picture period amplitude = 0.2 V_{p-p}) to pin 78. 2) Measure the picture period amplitude of pins 15, 13, 11 (V41, V42, and V43). 3) G_R = V43/0.2 G_G = V42/0.2 G_B = V41/0.2
T_2	Unicolor Adjustment Characteristics	↑	↑	↑	↑	↑	↑	↑	↑	↑	1) Input signal 1 (f_0 = 100 kHz, picture period amplitude = 0.2 V_{p-p}) to pin 78. 2) Set the unicolor data to maximum (7F), center (40), and minimum (00) and measure the pin 11 picture period amplitudes for each case. (v_uMAX, v_uCNT, v_uMIN) 3) Calculate the unicolor maximum and minimum amplitude ratios using digital conversion. (Δv_u)
T_3	Brightness Adjustment Characteristics	↑	↑	↑	↑	↑	↑	↑	↑	↑	1) Input signal 2 to pin 78 and adjust the picture period amplitude output of pin 11 to 1 V_{p-p}. 2) Measure the voltage of pin 11 when the brightness is changed to maximum (FF), center (80), and minimum (00). (VbrMAX, VbrCNT, VbrMIN)
T_4	Brightness Sensitivity	↑	↑	↑	↑	↑	↑	↑	↑	↑	1) Using the results obtained from T_3, calculate the brightness sensitivity from the following formula. 2) Gbr = (VbrMAX − VbrMIN)/256
T_5	White Peak Slice Level	↑	↑	↑	↑	↑	↑	↑	↑	↑	1) Change the bus data and set the sub-contrast to maximum. 2) Connect an external power supply to pin 78 and increase the voltage gradually from 5.8 V. 3) Measure the picture period amplitude voltage of pin 11 when pin 11°s picture period is clipped (Vwps1). 4) Change the subaddress (05) data to (81) and repeat steps 1) to 3) above. (Vwps2)
T_6	Black Peak Slice Level	A	A	A	A	A	A	B	B	C	1) Repeat step 1) of T_5. 2) Connect an external power supply to pin 78 and decrease the voltage gradually from 5.8 V. 3) Measure the voltages of pins 11, 13, and 15 when their picture periods are clipped.

Note	Parameter	Test Conditions (unless otherwise stated, V_{CC1} = 5 V, V_{CC2}/V_{CC3}/DEF V_{CC} = 9 V, Ta = 25 ± 3°C)									
		Switching Mode									Test Conditions
		SW_{33}	SW_{34}	SW_{35}	SW_{37}	SW_{38}	SW_{39}	SW_{51}	SW_{52}	SW_{53}	
T_7	Half Tone Characteristics	↑	↑	↑	↑	↑	↑	↑	↑	A	1) Input signal 1 (f_0 = 100 kHz, picture period amplitude = 0.2 V_{p-p}) to pin 78. 2) Measure the picture period amplitude of pin 15 ($V41_A$). 3) Apply 1.5 V from an external power supply to pin 6. 4) Measure the picture period amplitude of pin 15 ($V41_B$). 5) $G_{HT1} = V41_B/V41_A$ 6) Halt the voltage applied to pin 6, set the subaddress (03) data to (81), and measure the picture period amplitude of pin 15 ($V41_C$). 7) $G_{HT2} = V41_C/V41_A$
T_8	BLK Pulse Delay Time	↑	↑	↑	↑	↑	↑	↑	↑	C	1) Calculate t_{dON}, t_{dOFF} from the signal applied to pin 25 (H.BLK input) (A below) and the output signals from pins 11, 13, and 15 (B below). (A) Signal applied to pin 25 (B) Output signals from pins 11, 13, 15 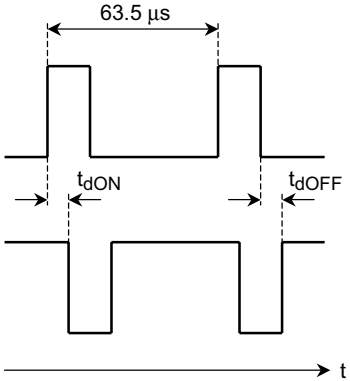
T_9	RGB Output Voltage	↑	↑	↑	↑	↑	↑	↑	↑	↑	1) Measure the picture period voltages for pins 11, 13, and 15.
T_{10}	Cutoff Voltage Variable Range	A	A	A	A	A	A	B	B	C	1) Set the subaddress (17) data to (07). 2) Measure the picture period voltage of pin 11 when the cutoff (subaddress 0C) data are changed to maximum (FF), center (80), and minimum (00), and calculate the amount of change of maximum and minimum from the center. (CUT+, CUT−). 3) In steps 1) and 2) above, make the following changes and remeasure: Change the subaddress (0D) data and measure pin 13, Change the subaddress (0E) data and measure pin 15.

Note	Parameter	Test Conditions (unless otherwise stated, V_{CC1} = 5 V, V_{CC2}/V_{CC3}/DEF V_{CC} = 9 V, Ta = 25 ± 3°C)									
		Switching Mode									Test Conditions
		SW_{33}	SW_{34}	SW_{35}	SW_{37}	SW_{38}	SW_{39}	SW_{51}	SW_{52}	SW_{53}	
T_{11}	Drive Adjustment Variable Range	↑	↑	↑	↑	↑	↑	↑	↑	A	1) Input signal 1 (f_0 = 100 kHz, picture period amplitude = 0.2 V_{p-p}) to pin 78. 2) Measure the picture period amplitude of pin 13 when the drive (subaddress-09) data are changed to maximum (FE), center (80), and minimum (00). 3) Calculate the maximum and minimum amplitude ratios for the drive center using decibel conversion. (DRG+, DRG–) 4) In steps 1) to 3) above, change the subaddress (0A) data, measure pin 15, and repeat the calculations. (DRB+, DRB–) 5) In steps 1) to 3) above, set data of the LSB of subaddress (09) to 1, measure pin 11, and repeat the calculations. (DRR+, DRR–)
T_{12}	Output Voltage During Muting	↑	↑	↑	↑	↑	↑	↑	↑	C	1) Set the subaddress (00) data to (FF). 2) Measure the picture period voltages of pins 11, 13, and 15. (MURD, MUGD, MUBD)
T_{13}	Output Voltage at Blue Back	↑	↑	↑	↑	↑	↑	↑	↑	↑	1) Set the subaddress (10) data to (08). 2) Measure the picture period voltages of pins 11 and 13 and the picture period amplitude of pin 15. (BB_R, BB_G, BB_B)
T_{14}	ACL Characteristics	A	A	A	A	A	A	B	B	A	1) Input signal 1 (f_0 = 100 kHz, picture period amplitude = 0.2 V_{p-p}) to pin 78. 2) Measure the picture period amplitude of pin 11 (v_{ACL1}). 3) Measure the picture period amplitude of pin 11 when –0.5 V DC is applied to pin 8 from an external power supply. (v_{ACL2}) 4) Measure the picture period amplitude of pin 11 when –1 V DC is applied to pin 8 from an external power supply. (v_{ACL3}) 5) ACL1 = $-20 \times \log (v_{ACL2}/v_{ACL1})$ ACL2 = $-20 \times \log (v_{ACL3}/v_{ACL1})$

Note	Parameter	Test Conditions (unless otherwise stated, V_{CC1} = 5 V, V_{CC2}/V_{CC3}/DEF V_{CC} = 9 V, Ta = 25 ± 3°C)									
		Switching Mode									Test Conditions
		SW_{33}	SW_{34}	SW_{35}	SW_{37}	SW_{38}	SW_{39}	SW_{51}	SW_{52}	SW_{53}	
T_{15}	ABL Point	↑	↑	↑	↑	↑	↑	↑	↑	↑	1) Measure the DC voltage of pin 8. (VABL1) 2) Set the subaddress (16) data to (1C). 3) Applying external voltage to pin 8, lower the pin voltage from 6.5 V. Measure the voltage of pin 8 when the voltage of pin 11 starts to change. (VABL2) 4) Change the data of subaddress (16) to (3C), (5C), (7C), (9C), (BC), (DC), and (FC), and repeat step 3) for each of these data. (VABL3, VABL4, VABL5, VABL6, VABL7, VABL8, VABL9) 5) ABL_{P1} = VABL2 – VABL1, ABL_{P5} = VABL6 – VABL1 ABL_{P2} = VABL3 – VABL1, ABL_{P6} = VABL7 – VABL1 ABL_{P3} = VABL4 – VABL1, ABL_{P7} = VABL8 – VABL1 ABL_{P4} = VABL5 – VABL1, ABL_{P8} = VABL9 – VABL1
T_{16}	ABL Gain	A	A	A	A	A	A	B	B	C	1) Apply 6.5 V from an external power supply to pin 8. 2) Set the subaddress (16) data to (00). Set the brightness to the maximum. 3) Measure the voltage of pin 11. (VABL10) 4) Apply 4.5 V from an external power supply to pin 8. 5) Change the data of subaddress (16) to (00), (04), (08), (0C), (10), (14), (18), and (1C), and repeat step 3) for each of these data.(VABL11, VABL12, VABL13, VABL14, VABL15, VABL16, VABL17, VABL18) 6) ABL_{G1} = VABL11 – VABL10, ABL_{G5} = VABL15 – VABL10 ABL_{G2} = VABL12 – VABL10, ABL_{G6} = VABL16 – VABL10 ABL_{G3} = VABL13 – VABL10, ABL_{G7} = VABL17 – VABL10 ABL_{G4} = VABL14 – VABL10, ABL_{G8} = VABL18 – VABL10
T_{17}	RGB Output Mode	↑	↑	↑	↑	↑	↑	↑	↑	↑	1) Adjust the brightness so that the picture period voltage of pin 11 is set to 2.5 V. 2) Set the subaddress (16) data to (01). 3) Measure the picture period voltages of pins 11, 13, and 15. ($V43_R$, $V42_R$, $V41_R$) 4) Change the subaddress (16) data to (02) and repeat step 3). ($V43_G$, $V42_G$, $V41_G$) 5) Change the subaddress (16) data to (03) and repeat step 3). ($V43_B$, $V42_B$, $V41_B$)

Note	Parameter	Test Conditions (unless otherwise stated, V_{CC1} = 5 V, V_{CC2}/V_{CC3}/DEF V_{CC} = 9 V, Ta = 25 ± 3°C)									
		Switching Mode									Test Conditions
		SW_{33}	SW_{34}	SW_{35}	SW_{37}	SW_{38}	SW_{39}	SW_{51}	SW_{52}	SW_{53}	
T_{18}	ACB Insertion Pulse Phase and Amplitude	A	A	A	A	A	A	B	B	A or C	1) Input signal 1 (f_0 = 100 kHz, picture period amplitude = 0.2 V_{p-p}) to pin 78 and adjust the drive adjustment data so that the picture period amplitudes of pins 13 and 15 are equal to that of pin 11. 2) Set SW_{53} to C. 3) Measure the voltages of pins 31, 32, and 74. From an external power supply, apply the measured voltages to these pins. 4) Set subaddress (15) data to (D_2). 5) From pins 11, 13, and 15, calculate the phase of the ACB insertion pulse in accordance with Figure 1 below. Note 5: After the completion of V.BLK, the video period following the falling edge of the FBP input is regarded as 1H and the periods at each completion of H.BLK are counted as 2H, 3H, 4H·· . 6) Measure the ACB insertion pulse amplitude (the level from the picture period amplitude at no input) of pins 11, 13, and 15.

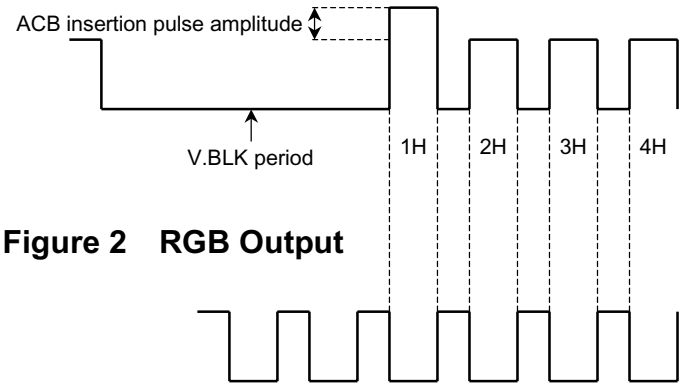

Figure 2 RGB Output

Figure 3 FBP Input (No.38)

Note	Parameter	Test Conditions (unless otherwise stated, V_{CC1} = 5 V, V_{CC2}/V_{CC3}/DEF V_{CC} = 9 V, Ta = 25 ± 3°C)									
		Switching Mode									Test Conditions
		SW_{33}	SW_{34}	SW_{35}	SW_{37}	SW_{38}	SW_{39}	SW_{51}	SW_{52}	SW_{53}	
T_{19}	RGB γ Characteristics	A	A	A	A	A	A	B	B	A	1) Input a ramp waveform to pin 78 and adjust the input amplitude so that the picture period amplitude of pin 11 is 2.3 V_{p-p}. 2) Adjust the drive adjustment data so that the picture period amplitudes of pins 13 and 15 are equal to that of pin 11. 3) Set the subaddress (14) data to (10). 4) From pins 13, 15, and 11, calculate the RGB γ start point and its gradient (decibel conversion) in relation to the off point in accordance with Figure 2. 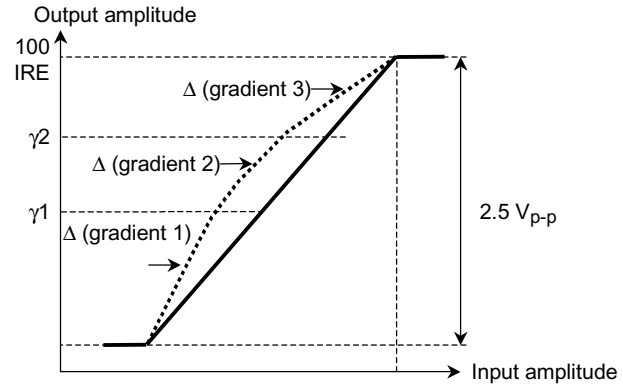
T_{20}	Analog RGB Gain	A or B	A or B	A or B	A	A	A	B	B	A	1) Input signal 1 (f_0 = 100 kHz, picture period amplitude = 0.2 V_{p-p}) to pin 78 and adjust the drive adjustment data so that the picture period amplitudes of pins 13 and 15 are equal to that of pin 11. 2) Apply 5 V from an external power supply to pin 27. 3) Input signal 1 (f_0 = 100 kHz, picture period amplitude = 0.2 V_{p-p}) to pin 22. 4) Measure the picture period amplitude of pin 11. ($V43_R$) 5) As in steps 2) and 3) above, input to pin 24 and measure pin 13, then input to pin 25 and measure pin 15. ($V42_G$, $V41_B$) 6) $G_{TXR} = V43_R/0.2$ $G_{TXG} = V42_G/0.2$ $G_{TXB} = V41_B/0.2$

Note	Parameter	Test Conditions (unless otherwise stated, V_{CC1} = 5 V, V_{CC2}/V_{CC3}/DEF V_{CC} = 9 V, Ta = 25 ± 3°C)									
		Switching Mode									Test Conditions
		SW_{33}	SW_{34}	SW_{35}	SW_{37}	SW_{38}	SW_{39}	SW_{51}	SW_{52}	SW_{53}	
T_{21}	Analog RGB White Peak Slice Level	A	A	A	↑	↑	↑	↑	↑	↑	1) Repeat step 1) of T_{20}. 2) Apply 5 V from an external power supply to pin 27. 3) Set the RGB contrast data to the maximum (7F). 4) Connect an external power supply to pin 22, increase the voltage gradually from 3.0 V, and measure the picture period amplitude voltage when pin 11 is clipped. 5) As in steps 3) and 4) above, input to pin 24 and measure pin 13, then input to pin 25 and measure pin 15.
T_{22}	Analog RGB Black Peak Limiter Level	↑	↑	↑	↑	↑	↑	↑	↑	↑	1) Repeat step 1) of T_{20}. 2) Apply 5 V from an external power supply to pin 27. 3) Set the RGB contrast data to the maximum (7F). 4) Connect an external power supply to pin 22, decrease the voltage gradually from 4.5 V, and measure the voltage when pin 11 is clipped. 5) As in steps 3) and 4) above, input to pin 24 and measure pin 13, then input to pin 25 and measure pin 15.
T_{23}	RGB Contrast Adjustment Characteristics	A or B	A or B	A or B	A	A	A	B	B	A	1) Repeat step 1) of T_{20}. 2) Apply 5 V from an external power supply to pin 27. 3) Input signal 1 (f_0 = 100 kHz, picture period amplitude = 0.2 V_{p-p}) to pin 22. 4) Measure the picture period amplitude of pin 11 when the RGB contrast data change to the maximum (7F), the center (40), and the minimum (00). ($vuTXR_{MAX}$, $vuTXR_{CNT}$, $vuTXR_{MIN}$) 5) Calculate the maximum and minimum amplitude ratios using decibel conversion. (DRG+, DRG–) 6) As in steps 3), 4) and 5) above, input to pin 24 and measure pin 13, then input to pin 25 and measure pin 15.

Note	Parameter	Test Conditions (unless otherwise stated, V_{CC1} = 5 V, V_{CC2}/V_{CC3}/DEF V_{CC} = 9 V, Ta = 25 ± 3°C)									
		Switching Mode									Test Conditions
		SW_{33}	SW_{34}	SW_{35}	SW_{37}	SW_{38}	SW_{39}	SW_{51}	SW_{52}	SW_{53}	
T_{24}	Analog RGB Brightness Adjustment Characteristics	A or B	A or B	A or B	↑	↑	↑	↑	↑	↑	1) Repeat step 1) of T_{20}. 2) Input signal 2 to pins 22, 24, and 25. 3) Apply 5 V from an external power supply to pin 27. 4) Adjust the signal 2 amplitude A so that the picture period amplitude of pin 11 is 0.5 V_{p-p}. 5) Measure the picture period voltage of pins 11, 13, and 15 when the RGB brightness change to the maximum (7F), the center (40), and the minimum (00). ($VbrTX_{MAX}$, $VbrTX_{CNT}$, $VbrTX_{MIN}$)
T_{25}	Analog RGB Brightness Sensitivity	↑	↑	↑	↑	↑	↑	↑	↑	↑	1) Using the results obtained from T24, calculate the RGB brightness sensitivity for pins 11, 13, and 15. 2) $GbrTX = (VbrTX_{MAX} - VbrTX_{MIN})/128$
T_{26}	Text ACL Characteristics	A	A	B	A	A	A	B	B	A	1) Repeat step 1) of T_{20}. 2) Apply 5 V from an external power supply to pin 27. 3) Input signal 1 (f_0 = 100 kHz, picture period amplitude = 0.2 V_{p-p}) to pin 22. 4) Measure the picture period amplitude of pin 11. (v_{TXACL1}) 5) Measure the picture period amplitude of pin 11 when –0.5 V DC is applied to pin 8 from an external source. (v_{TXACL2}) 6) Measure the picture period amplitude of pin 11 when –1 V DC is applied to pin 8 from an external source. (v_{TXACL3}) 7) $TXACL1 = -20 \times \ell og\ (v_{TXACL2}/v_{TXACL1})$ $TXACL2 = -20 \times \ell og\ (v_{TXACL3}/v_{TXACL1})$ 8) Set the subaddress (10) data to (01) and repeat the calculations in steps 5) and 6). (TXACL3, TXACL4)

Note	Parameter	Test Conditions (unless otherwise stated, V_{CC1} = 5 V, V_{CC2}/V_{CC3}/DEF V_{CC} = 9 V, Ta = 25 ± 3°C)									
		Switching Mode									Test Conditions
		SW_{33}	SW_{34}	SW_{35}	SW_{37}	SW_{38}	SW_{39}	SW_{51}	SW_{52}	SW_{53}	
T_{27}	Analog OSD Gain	↑	↑	A	A or B	A or B	A or B	↑	↑	↑	1) Input signal 1 (f_0 = 100 kHz, picture period amplitude = 0.2 V_{p-p}) to pin 78 and adjust the drive adjustment data so that the picture period amplitudes of pins 13 and 15 are equal to that of pin 11. 2) Apply 5 V from an external power supply to pin 21. 3) Input signal 1 (f_0 = 100 kHz, picture period amplitude = 0.2 V_{p-p}) to pin 18. 4) Measure the picture period amplitude of pin 11. ($V43_R$) 5) As in steps 3) and 4) above, input to pin 19 and measure pin 13, then input to pin 20 and measure pin 15. ($V42_G$, $V41_B$) 6) $GOSD_R = V43_R/0.2$ $GOSD_G = V42_G/0.2$ $GOSD_B = V41_B/0.2$
T_{28}	Analog OSD White Peak Slice Level	A	A	A	A	A	A	B	B	A	1) Repeat step 1) of T_{27}. 2) Apply 5 V from an external power supply to pin 21. 3) Apply external voltage to pin 18, increase the voltage gradually from 0.0 V, and measure the picture period amplitude voltage when pin 11 is clipped. (V_{OSD1R}) 4) As in step 3) above, input to pin 19 and measure pin 13. Input to pin 20 and measure pin 15. 5) Set the subaddress (10) data to (04) and repeat the measurements in steps 3) and 4). (V_{OSD2R}, V_{OSD2G}, V_{OSD2B})
T_{29}	Analog OSD Black Peak Limiter Level	↑	↑	↑	↑	↑	↑	↑	↑	↑	1) Repeat step 1) of T_{27}. 2) Apply 5 V from an external power supply to pin 21. 3) Apply external voltage to pin 18, decrease the voltage gradually from 4.5 V, and measure the voltage when pin 11 is clipped. 4) As in step 3) above, input to pin 19 and measure pin 13. Input to pin 20 and measure pin 15.
T_{30}	Analog OSD Output DC Voltage	↑	↑	↑	↑	↑	↑	↑	↑	↑	1) Repeat step 1) of T_{27}. 2) Apply 5 V from an external power supply to pin 21. 3) Measure the picture period voltages of pins 11, 13, and 15. (V_{OSDDCR}, V_{OSDDCG}, V_{OSDDCB})

Note	Parameter	Test Conditions (unless otherwise stated, V_{CC1} = 5 V, V_{CC2}/V_{CC3}/DEF V_{CC} = 9 V, Ta = 25 ± 3°C)									
		Switching Mode									Test Conditions
		SW_{33}	SW_{34}	SW_{35}	SW_{37}	SW_{38}	SW_{39}	SW_{51}	SW_{52}	SW_{53}	
T_{31}	OSD ACL Characteristics	A	A	A	A	A	B	B	B	A	1) Repeat step 1) of T_{27}. Set the subaddress (10) data to (02). 2) Apply 5 V from an external power supply to pin 21. 3) Input signal 1 (f_0 = 100 kHz, picture period amplitude = 0.2 V_{p-p}) to pin 18. 4) Measure the picture period amplitude of pin 11. ($v_{OSDACL1}$) 5) Measure the picture period amplitude of pin 11 when –0.5 V DC is applied to pin 8 from an external source. ($v_{OSDACL2}$) 6) Measure the picture period amplitude of pin 11 when –1 V DC is applied to pin 8 from an external source. ($v_{OSDACL3}$) 7) OSDACL1 = $-20 \times \ell og\ (v_{OSDACL2}/v_{OSDACL1})$ OSDACL2 = $-20 \times \ell og\ (v_{OSDACL3}/v_{OSDACL1})$ 8) Change the subaddress (10) data to (00) and repeat the measurements in steps 1) to 7). (OSDACL3, OSDACL4)

Note	Parameter	Test Conditions (unless otherwise stated, V_{CC1} = 5 V, V_{CC2}/V_{CC3}/DEF V_{CC} = 9 V, Ta = 25 ± 3°C)									
		Switching Mode									Test Conditions
		SW_{33}	SW_{34}	SW_{35}	SW_{37}	SW_{38}	SW_{39}	SW_{51}	SW_{52}	SW_{53}	
	Color Difference Block										Color difference block common test conditions SW_{13}: A, SW_{15}: C, SW_{18}: ON, SW_{20}: ON, SW_{23}: ON, SW_{24}: ON, SW_{25}: ON
A_1	Color Difference Contrast Adjustment Characteristics	A	A	A	A	A	A	A or B	A or B	C	1) Change the G and B drive data to the value resulting from the adjustment in step 1) of T_{20}. 2) Set the brightness to maximum, set the subaddress (0F) data to (30), and set the subaddress (10) data to (20). 3) Input signal 3 (f_0 = 100 kHz, picture period amplitude = 0.23 V_{p-p}) to pin 1. 4) Measure the picture period amplitude of pin 11 when the unicolor data change to the maximum (7F), the center (40), and the minimum (00). ($vuCY_{MAX}$, $vuCY_{CNT}$, $vuCY_{MIN}$) 5) Calculate the unicolor maximum and minimum amplitude ratios using decibel conversion. (ΔvuCY) 6) Repeat steps 3), 4), and 5) above, inputting the picture period amplitude 0.2 V_{p-p} to pin 80 and measuring pin 15.
A_2	Color Adjustment Characteristics	↑	↑	↑	↑	↑	↑	↑	↑	↑	1) Measure the voltage of pin 1. Set the brightness to maximum, set the subaddress (0F) data to (30), and set the subaddress (10) data to (20). 2) Input signal 3 (f_0 = 100 kHz, picture period amplitude = 0.115 V_{p-p}) to pin 1. 3) Measure the picture period amplitude of pin 11 when the color data are changed to the maximum (7F), the center (40), and the minimum (01). ($vcCY_{MAX}$, $vcCY_{CNT}$, $vcCY_{MIN}$) 4) Calculate the color maximum and minimum amplitude ratios for the center using decibel conversion. (ΔvcCY+, ΔvcCY−) 5) Repeat steps 2) to 4) above, inputting the picture period amplitude 0.1 V_{p-p} to pin 80 and measuring pin 15.

Note	Parameter	Test Conditions (unless otherwise stated, V_{CC1} = 5 V, V_{CC2}/V_{CC3}/DEF V_{CC} = 9 V, Ta = 25 ± 3°C)									
		Switching Mode									Test Conditions
		SW_{33}	SW_{34}	SW_{35}	SW_{37}	SW_{38}	SW_{39}	SW_{51}	SW_{52}	SW_{53}	
A_3	Color Difference Half Tone Characteristics	A	A	A	A	A	A	A or B	A or B	C	1) Set the subaddress (10) data to (20). 2) Input signal 3 (f_0 = 100 kHz, picture period amplitude = 0.2 V_{p-p}) to pin 1. 3) Measure the picture period amplitude of the waveform output from pin 11. ($vHTA_{RY}$) 4) Apply 1.5 V from an external power supply to pin 6. 5) Measure the picture period amplitude of the waveform output from pin 11. ($vHTB_{RY}$) 6) $GHT_{RY} = vHTB_{RY}/vHTA_{RY}$ 7) Repeat steps 1) to 5) above with pin 13. $GHT_{GY} = vHTB_{GY}/vHTA_{GY}$ 8) Repeat steps 1) to 5) above, inputting signal to pin 80 and measuring pin 15. $GHT_{BY} = vHTB_{BY}/vHTA_{BY}$

Note	Parameter	Test Conditions (unless otherwise stated, V_{CC1} = 5 V, V_{CC2}/V_{CC3}/DEF V_{CC} = 9 V, Ta = 25 ± 3°C)									
		Switching Mode									Test Conditions
		SW_{33}	SW_{34}	SW_{35}	SW_{37}	SW_{38}	SW_{39}	SW_{51}	SW_{52}	SW_{53}	
A_4	Color γ Characteristics	A	A	A	A	A	A	B	B	C	1) Set the subaddress (10) data to (20). 2) Input signal 2 to pin 1. 3) When the subaddress (07) data are: (80) – γOFF (82) – γ1ON (84) – γ2ON (86) – γ3ON measure the changes in the amplitude level of the pin 43 output signal at an increase the amplitude A of signal 2 and plot the characteristics. 4) Calculate the γON gradient Δ, using Vγ, which represents the point at which the γ characteristics become effective, and the gradient of the linear section with γOFF as (1). 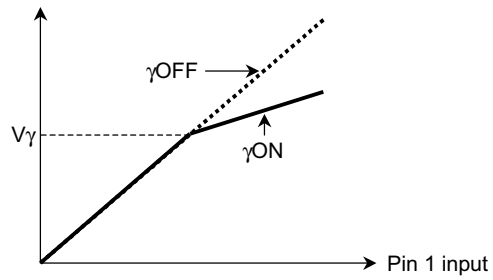
A_5	Color Limiter Characteristics	↑	↑	↑	↑	↑	↑	↑	A	↑	1) Measure the voltage of pin 1. 2) Set the subaddress (10) data to (20). 3) Input signal 2 (picture period amplitude = 0.4 V_{p-p}) to pin 80. 4) Measure the picture period amplitude of the pin 11 output signal when the subaddress (07) data are (80) and (81). (CLT0, CLT1)

Note	Parameter	Test Conditions (unless otherwise stated, V_{CC1} = 5 V, V_{CC2}/V_{CC3}/DEF V_{CC} = 9 V, Ta = 25 ± 3°C)									
		Switching Mode									Test Conditions
		SW_{33}	SW_{34}	SW_{35}	SW_{37}	SW_{38}	SW_{39}	SW_{51}	SW_{52}	SW_{53}	
A_6	High-Brightness Color Gain	A	A	A	A	A	A	B	A	C	1) Set subaddress (10) data to (20). 2) Input signal 2 (picture period amplitude = 0.2 V_{p-p}) to pin 80. 3) Adjust the color control so that the picture period amplitude output from pin 15 is 1.2 V_{p-p}. 4) Measure the picture period amplitude of the pin 15 output signal when the subaddress (06) data are (FF). (V_{41}) 5) HBC1 = (1.2 – V_{41})/1.2
A_7	Flesh Color Characteristics	↑	↑	↑	↑	↑	↑	A	↑	↑	1) Input IQ demodulated flesh-bar signals (15°-step rainbow signals in the range –30° to +240°) to pin 80 (Q signal) and pin 1 (I signal) as 0.2 V_{p-p}. Set the brightness to maximum. 2) Set subaddress (10) data to (00). 3) Measure the signals output from pins 11 and 15 and switch to subaddress (10) data to (06). Measure the output signals and calculate the variation characteristics of the color vector phase. 4) Draw the vector variation characteristics curve showing the on state from the off state and calculate the gradient in the vicinity of the I axis as Fa33. Subaddress (08) Data (80) off Data (81) on 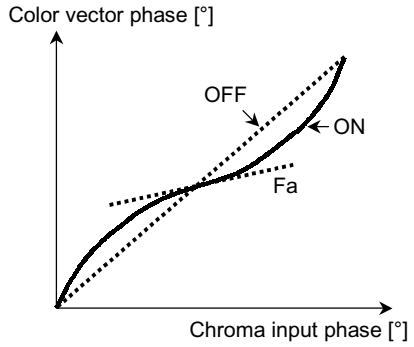

Note	Parameter	Test Conditions (unless otherwise stated, V_{CC1} = 5 V, V_{CC2}/V_{CC3}/DEF V_{CC} = 9 V, Ta = 25 ± 3°C)									
		Switching Mode									Test Conditions
		SW_{33}	SW_{34}	SW_{35}	SW_{37}	SW_{38}	SW_{39}	SW_{51}	SW_{52}	SW_{53}	
A_8	Color Detail Emphasis	A	A	A	A	A	A	A	B	A	1) Connect SG to Y-IN and input a 4 MHz frequency sine wave at 20 mV_{p-p}. 2) Set the subaddress (02) data to (01). 3) Set the subaddress (10) data to (20). 4) Set the subaddress (11) data to (02). 5) Read the 4 MHz amplitude output to pin 11. (V_{CDE0}) 6) Input signal 2 (picture period amplitude = 0.3 V_{p-p}) to pin 1. 7) Set the subaddress (02) data to (81). 8) Read the 4 MHz amplitude output to pin 11. (V_{CDE1}) (mV_{p-p}) 9) Set the subaddress (0A) data to (81) and read the amplitude of frequency Fp output to pin 11. (V_{CDE2}) (mV_{p-p}) 10) GCD0 = 20 × łog ($\lvert V_{CDE1} - V_{CDE0} \rvert$/20) GCD1 = 20 × łog ($\lvert V_{CDE2} - V_{CDE0} \rvert$/20)

Note	Parameter	Test Conditions (unless otherwise stated, V_{CC1} = 5 V, V_{CC2}/V_{CC3}/DEF V_{CC} = 9 V, Ta = 25 ± 3°C)						
		Switching Mode						Test Conditions
		SW_{16}	SW_{17}	SW_{18}	SW_{20}	SW_{23}	SW_{25}	
	DEF Block							DEF Block common test conditions SW_{13}: A, SW_{33}: A, SW_{34}: A, SW_{35}: A, SW_{37}: A, SW_{38}: A, SW_{39}: A, SW_{48}: ON, SW_{49}: ON, SW_{51}: B, SW_{52}: B, SW_{56}: ON, BUS Data = power on reset
D_1	Horizontal Oscillation Control Sensitivity	D	B	ON	OFF	A	ON	Calculate the pin 41 (H.out) frequency variation rate when the voltage on pin 45 is varied by ±0.05 V with a horizontal oscillation frequency of 15.734 kHz.
D_2	Horizontal Sync Phase	↑	C	↑	ON	↑	↑	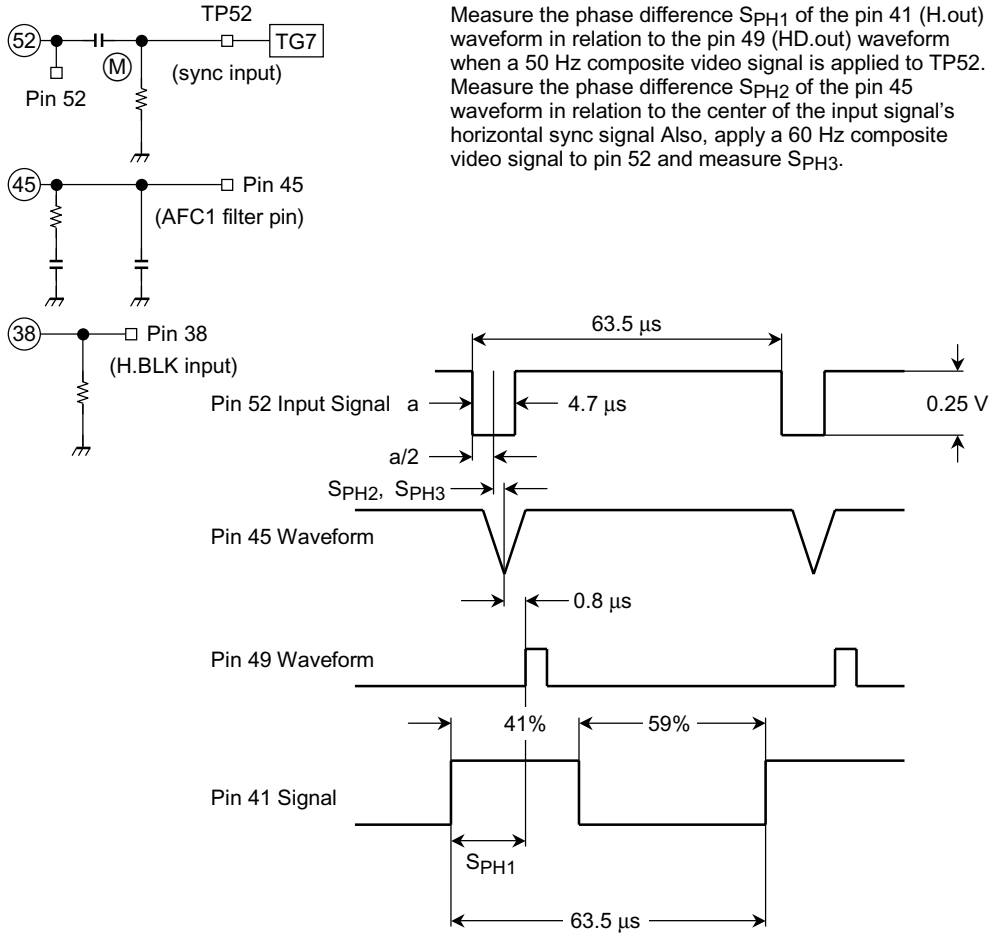 Measure the phase difference S_{PH1} of the pin 41 (H.out) waveform in relation to the pin 49 (HD.out) waveform when a 50 Hz composite video signal is applied to TP52. Measure the phase difference S_{PH2} of the pin 45 waveform in relation to the center of the input signal's horizontal sync signal Also, apply a 60 Hz composite video signal to pin 52 and measure S_{PH3}.

Note	Parameter	Test Conditions (unless otherwise stated, V_{CC1} = 5 V, V_{CC2}/V_{CC3}/DEF V_{CC} = 9 V, Ta = 25 ± 3°C)						
		Switching Mode						Test Conditions
		SW_{16}	SW_{17}	SW_{18}	SW_{20}	SW_{23}	SW_{25}	
D_3	Range of Curve Correction	D	C	ON	ON	A	ON	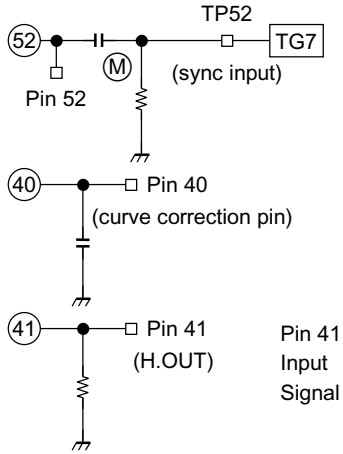 Vary the voltage by 1.5 V to 3.5 V, apply a 50 Hz composite video signal to pin TP52, and measure the phase variation of the pin 41 (H.out) waveform. 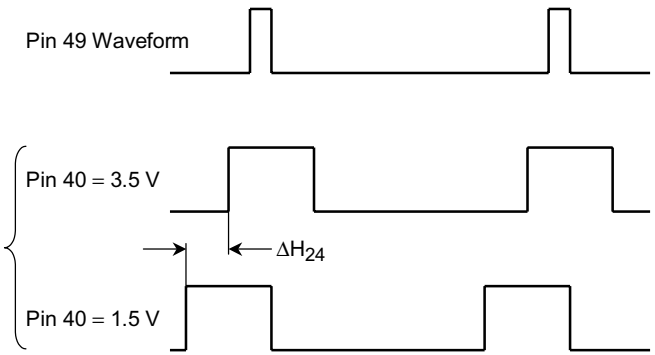
D_4	Horizontal Screen Phase Adjustment Range	↑	↑	↑	↑	↑	↑	Under the same conditions as those for D_3, measure phase variation of the pin 41 (H.out) waveform when subaddress (0B) data D_7 to D_3 are varied by (00000) to (11111). 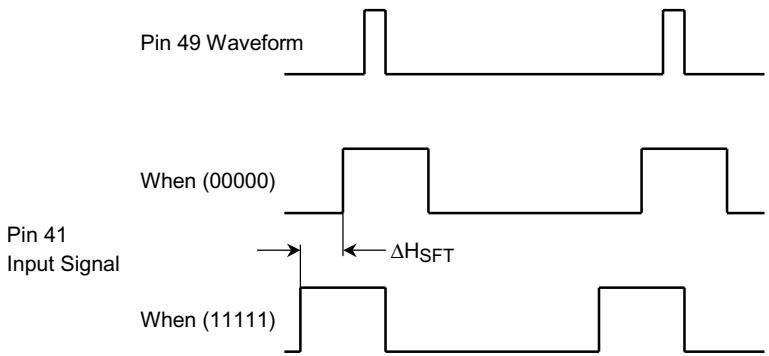

Note	Parameter	Test Conditions (unless otherwise stated, V_{CC1} = 5 V, V_{CC2}/V_{CC3}/DEF V_{CC} = 9 V, Ta = 25 ± 3°C)							
		Switching Mode							Test Conditions
		SW_{16}	SW_{17}	SW_{18}	SW_{20}	SW_{23}	SW_{25}	SW_{35}	
D_5	Clamp Pulse Start Phase Pulse Width of Clamp Pulse	D	C	ON	ON	A	ON	OPEN	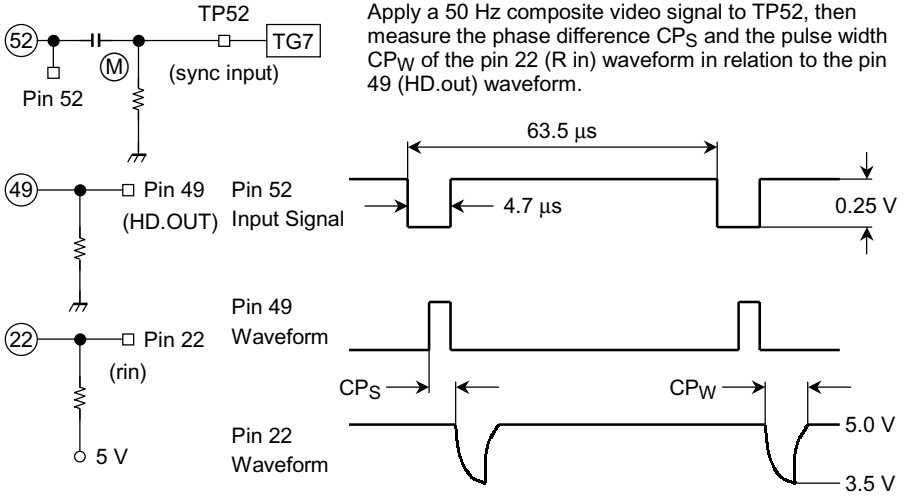 Apply a 50 Hz composite video signal to TP52, then measure the phase difference CP_S and the pulse width CP_W of the pin 22 (R in) waveform in relation to the pin 49 (HD.out) waveform.
D_6	Gate Pulse Start Phase Pulse Width of Gate Pulse	↑	↑	↑	↑	↑	↑	—	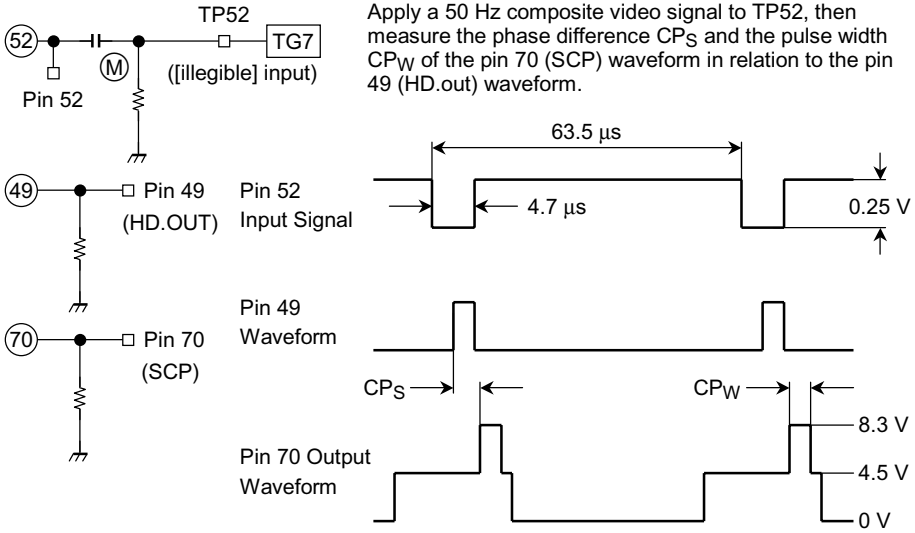 Apply a 50 Hz composite video signal to TP52, then measure the phase difference CP_S and the pulse width CP_W of the pin 70 (SCP) waveform in relation to the pin 49 (HD.out) waveform.

Note	Parameter	Test Conditions (unless otherwise stated, V_{CC1} = 5 V, V_{CC2}/V_{CC3}/DEF V_{CC} = 9 V, Ta = 25 ± 3°C)						
		Switching Mode						Test Conditions
		SW_{16}	SW_{17}	SW_{18}	SW_{20}	SW_{23}	SW_{25}	
D_7	Horizontal Blanking Pulse Start Phase Pulse Width of Horizontal Blanking Pulse	D	C	ON	ON	A	ON	Under the same conditions as those for D_6, measure the phase difference HP_S and HP_{W50} of the horizontal blanking pulse. Also measure HP_{W60} at 60 Hz. 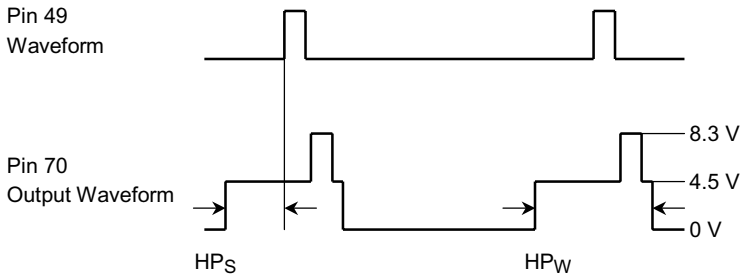
D_8	HD Output Start Phase HD Output Pulse Width HD Output Amplitude	↑	↑	↑	↑	↑	↑	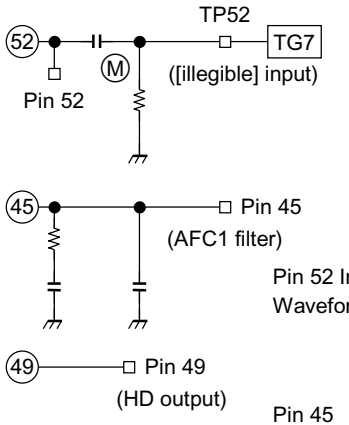 Apply a 50 Hz composite video signal to TP52, then measure the phase difference HP_S and the pulse width HP_W/V_{HD} of the pin 49 (HD out) waveform in relation to the pin 45 (AFC1 filter) waveform. 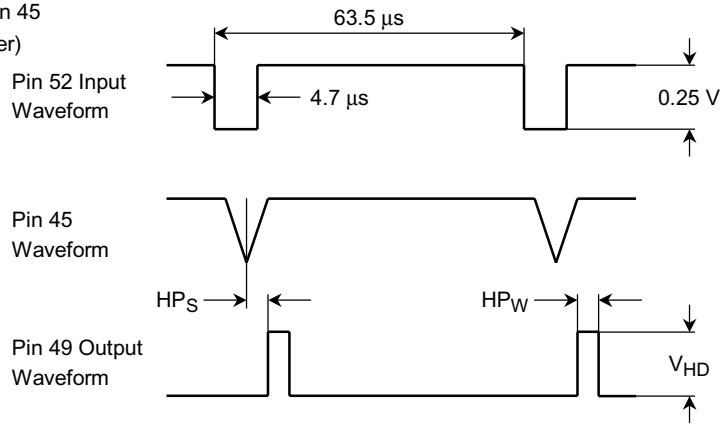

Note	Parameter	Test Conditions (unless otherwise stated, V_{CC1} = 5 V, V_{CC2}/V_{CC3}/DEF V_{CC} = 9 V, Ta = 25 ± 3°C)						
		Switching Mode						Test Conditions
		SW_{16}	SW_{17}	SW_{18}	SW_{20}	SW_{23}	SW_{25}	
D_9	Vertical Blanking Pulse Start Phase (1) Vertical Blanking Pulse End Phase (1)	D	C	ON	ON	A	ON	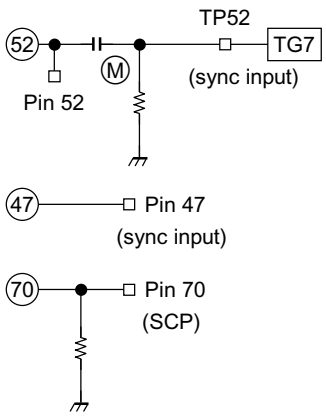 Apply a 50 Hz composite video signal to TP52, then measure the phase difference VP_{50S1} and the pulse width VP_{50S2} of the pin 70 (SCP) waveform in relation to the pin 49 (sync input) waveform.
D_{10}	Vertical Blanking Pulse Start Phase (2) Vertical Blanking Pulse End Phase (2)	↑	↑	↑	↑	↑	↑	Apply the same conditions as those for D_9 except change the input signal to a 60 Hz comp. video signal and measure the phase difference VP_{60S} and pulse width VP_{60W}.
D_{11}	Vertical Pull-In Range (1)	↑	↑	↑	↑	↑	↑	Input a 50 Hz composite video signal to pin TP52, vary the vertical frequency of this signal in 0.5H-steps, and measure the vertical pull-in range.
	Vertical Pull-In Range (2)							Set D_5 to D_3 of subaddress (17) to (001), vary the vertical frequency of a 60 Hz composite video signal input to pin TP52 in 0.5H-steps, and measure the vertical pull-in range.
	Vertical Pull-In Range (3)							Input a 50 Hz composite video signal to pin TP52, vary the vertical frequency of this signal in 0.5H-steps, and measure the number of Hs when D_2 of the 1st byte changes from 0 to 1 in bus read mode. Also check that D_1 of the 1st byte is 0 when 1 V = 312.5H, when D_1 is 1 in bus read mode, and 1 V < 311.5 or 1 V > 313.5H.
	Vertical Pull-In Range (4)							Input a 60 Hz composite video signal to pin TP52, vary the vertical frequency of this signal in 0.5H-steps, and measure the number of Hs when D_2 of the 1st byte changes from 1 to 0 in bus read mode when. Also check that D_1 of the 1st byte is 0 when 1 V = 262.5H, D_1 is 1 in bus read mode, and 1 V < 261.5 or 1 V > 263.5H.

Note	Parameter	Test Conditions (unless otherwise stated, V_{CC1} = 5 V, V_{CC2}/V_{CC3}/DEF V_{CC} = 9 V, Ta = 25 ± 3°C)								
		Switching Mode								Test Conditions
		SW_{16}	SW_{17}	SW_{18}	SW_{20}	SW_{23}	SW_{25}	SW_{33} SW_{34} SW_{35} SW_{37} SW_{38} SW_{39}	#6 #21 #27	
D_{12}	RGB Output Vertical Blanking Pulse Start Phase (1) RGB Output Vertical Blanking Pulse End Phase (1)	D	C	ON	ON	A	ON	A	Gro-und	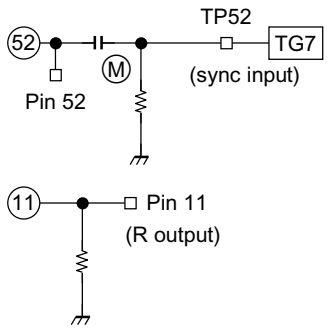 Apply a 50 Hz composite video signal to TP52, then measure the phase difference VR_{50S1} and the pulse width VR_{50S2} of the pin 11 (R.out) waveform in relation to the pin 52 (sync input) waveform. Similarly, measure pins 13 and 15.
D_{13}	RGB Output Vertical Blanking Pulse Start Phase (2) RGB Output Vertical Blanking Pulse End Phase (2)	↑	↑	↑	↑	↑	↑	↑	↑	Apply the same conditions as those for D_{12} except change the input signal to a 60 Hz comp. video signal and measure the phase difference VP_{60S1} and pulse width VP_{60S2}.

Chroma Test Signals

1) Input Signal C-1

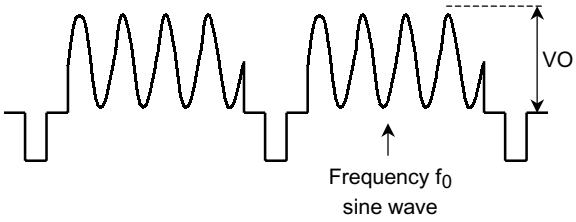

2) Input Signal C-2

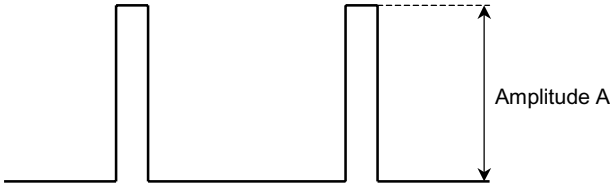

3) Input Signal C-3

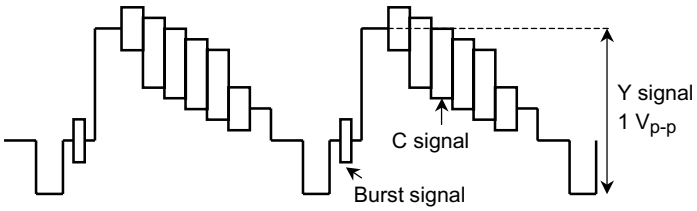

4) Input Signal C-4

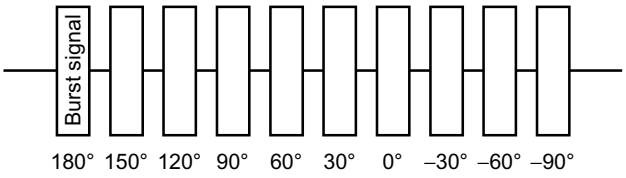

Text/Color Difference Test Signals

1) Video Signal

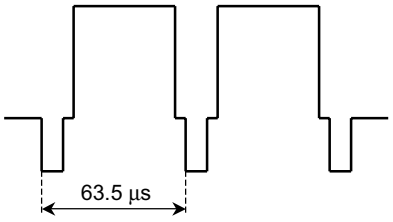

2) Input Signal 1

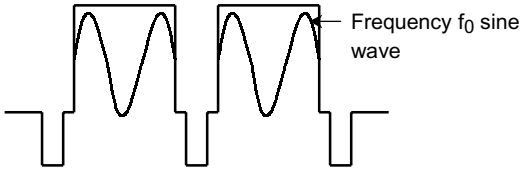

3) Input Signal 2

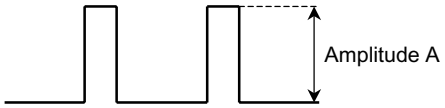

4) Input Signal 3

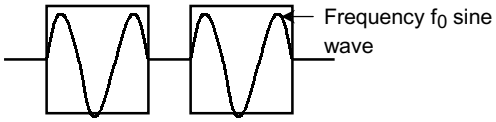

Vertical Output Pulse Width/Vertical Output Pulse Phase Variation/Vertical Output Pulse Phase Range

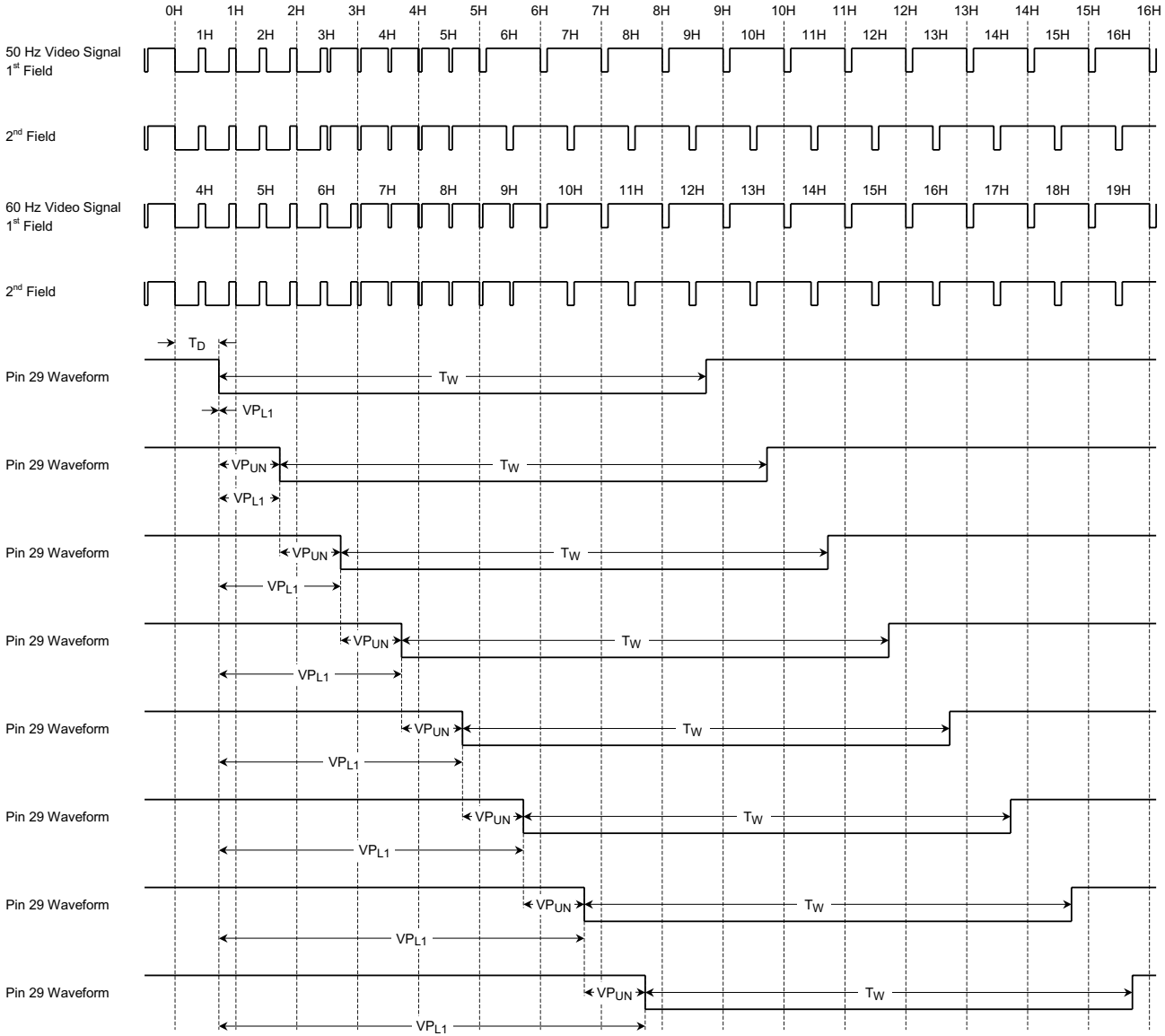

RGB Vertical Blanking Pulse Start Phase/End Phase

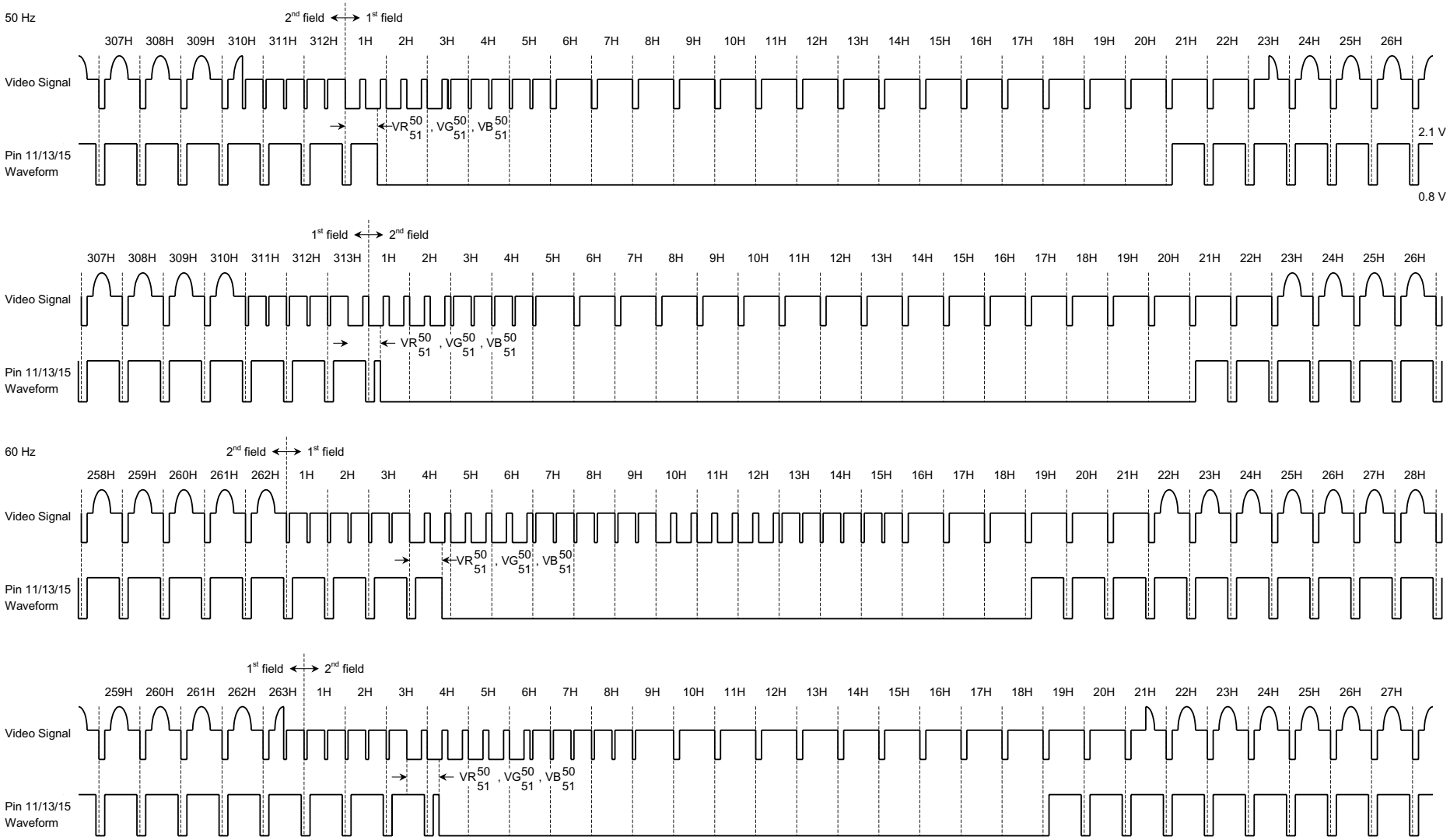

Test Circuit

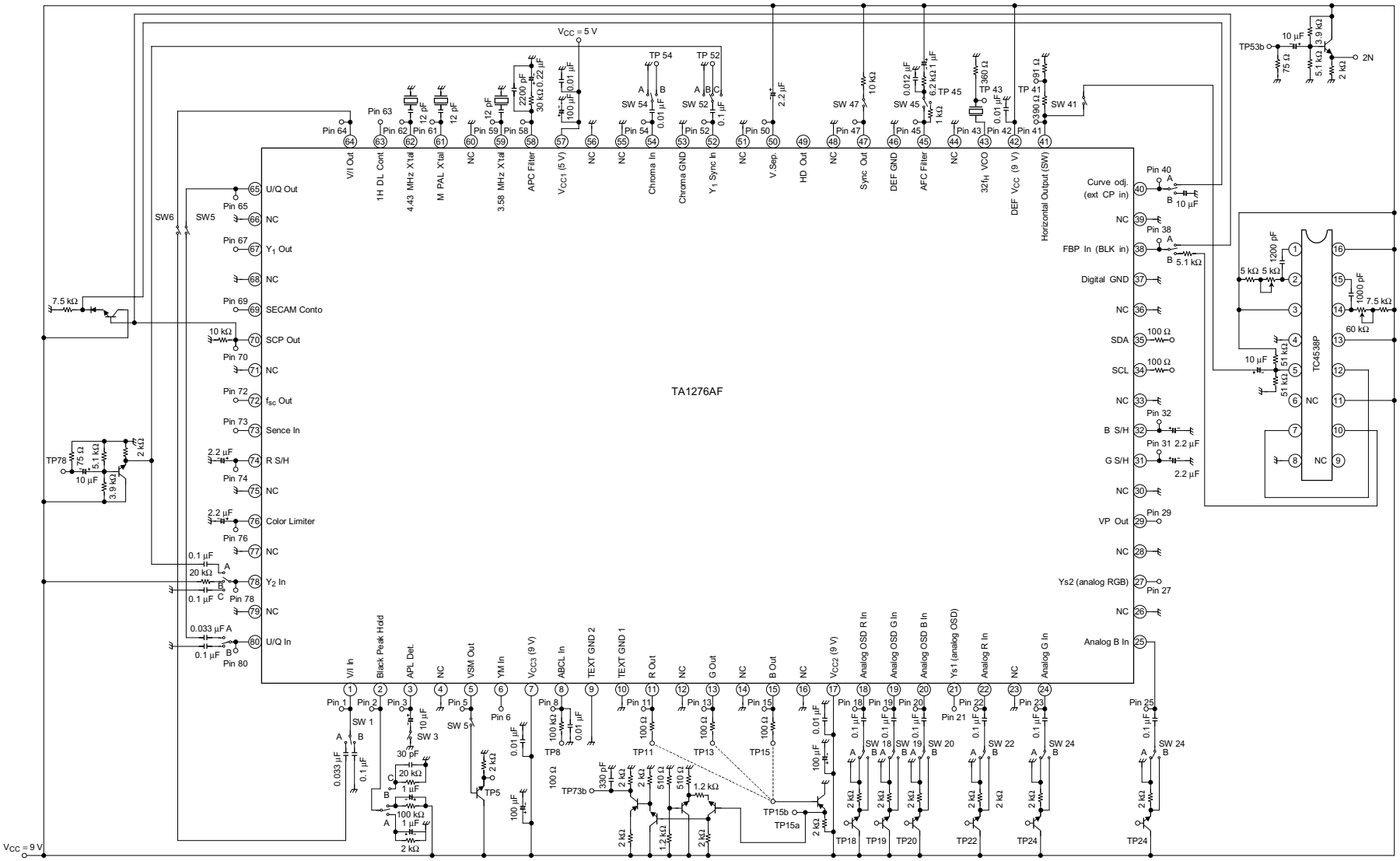

Application Circuit 1-Normal Scan (3.58 NTSC)

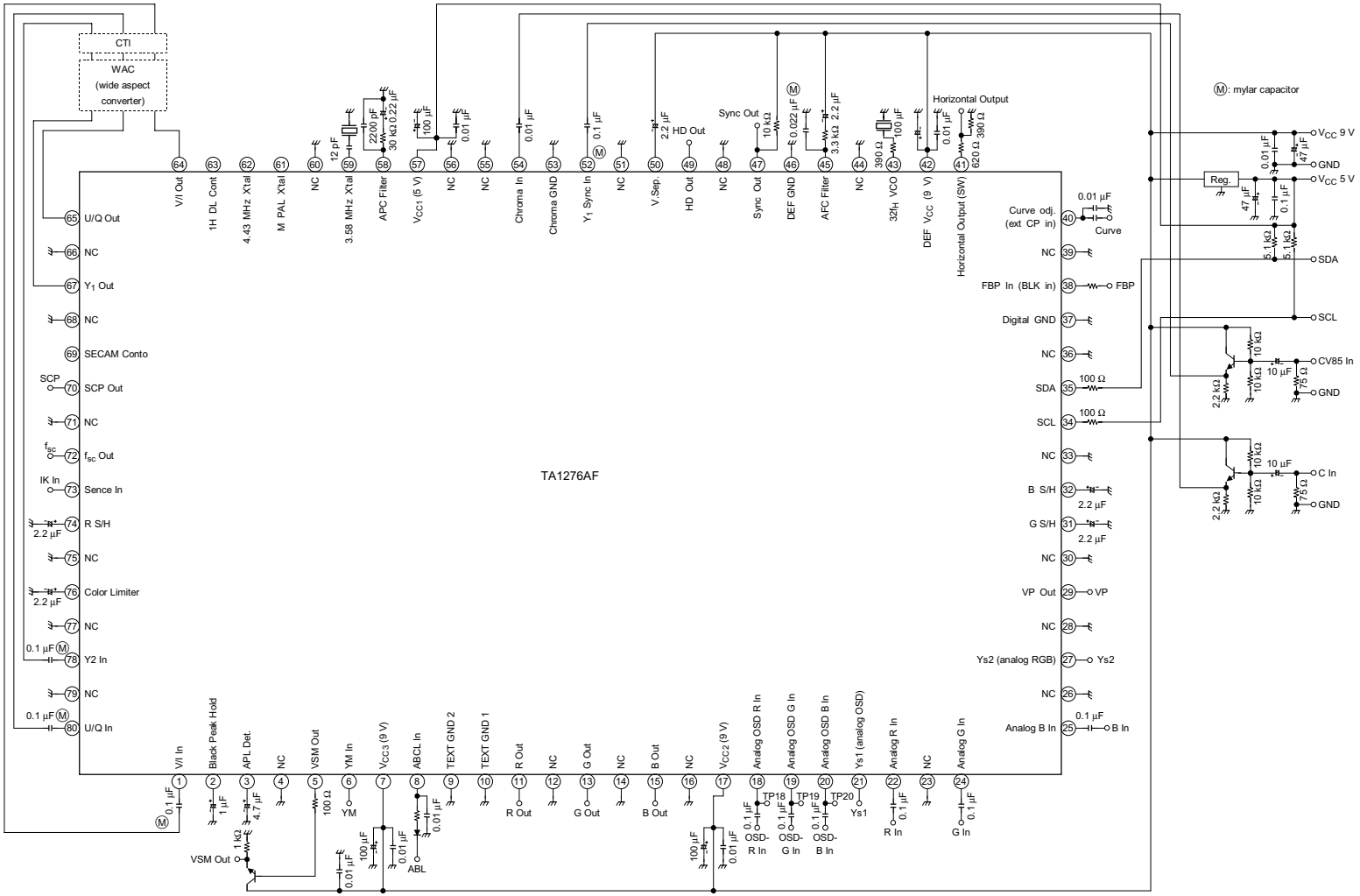

Application Circuit 2-Normal Scan (4.43 PAL/4.43 NTSC/3.58 NTSC)

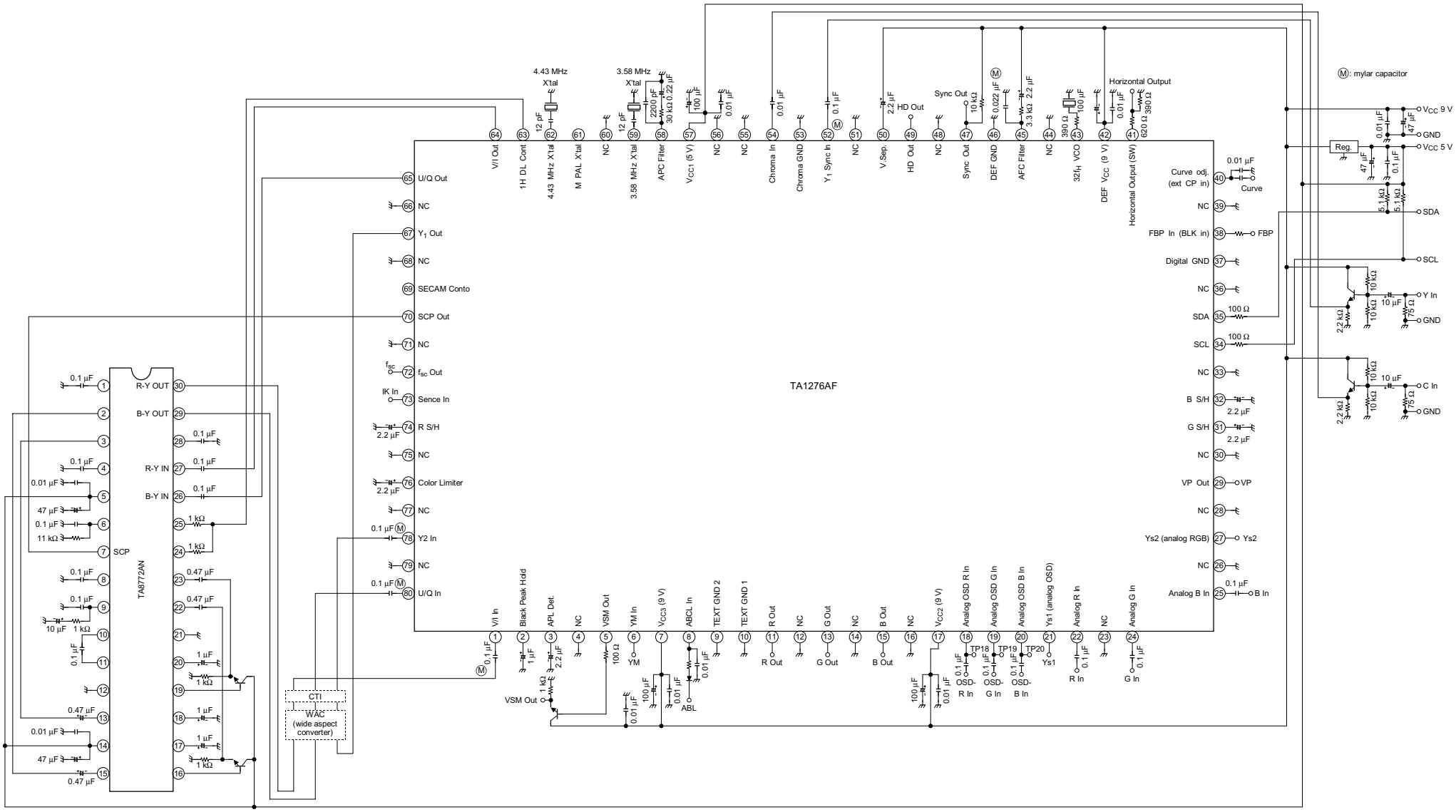

Application Circuit 3-Normal Scan (4.43 PAL/4.43 NTSC/3.58 NTSC/SECAM)

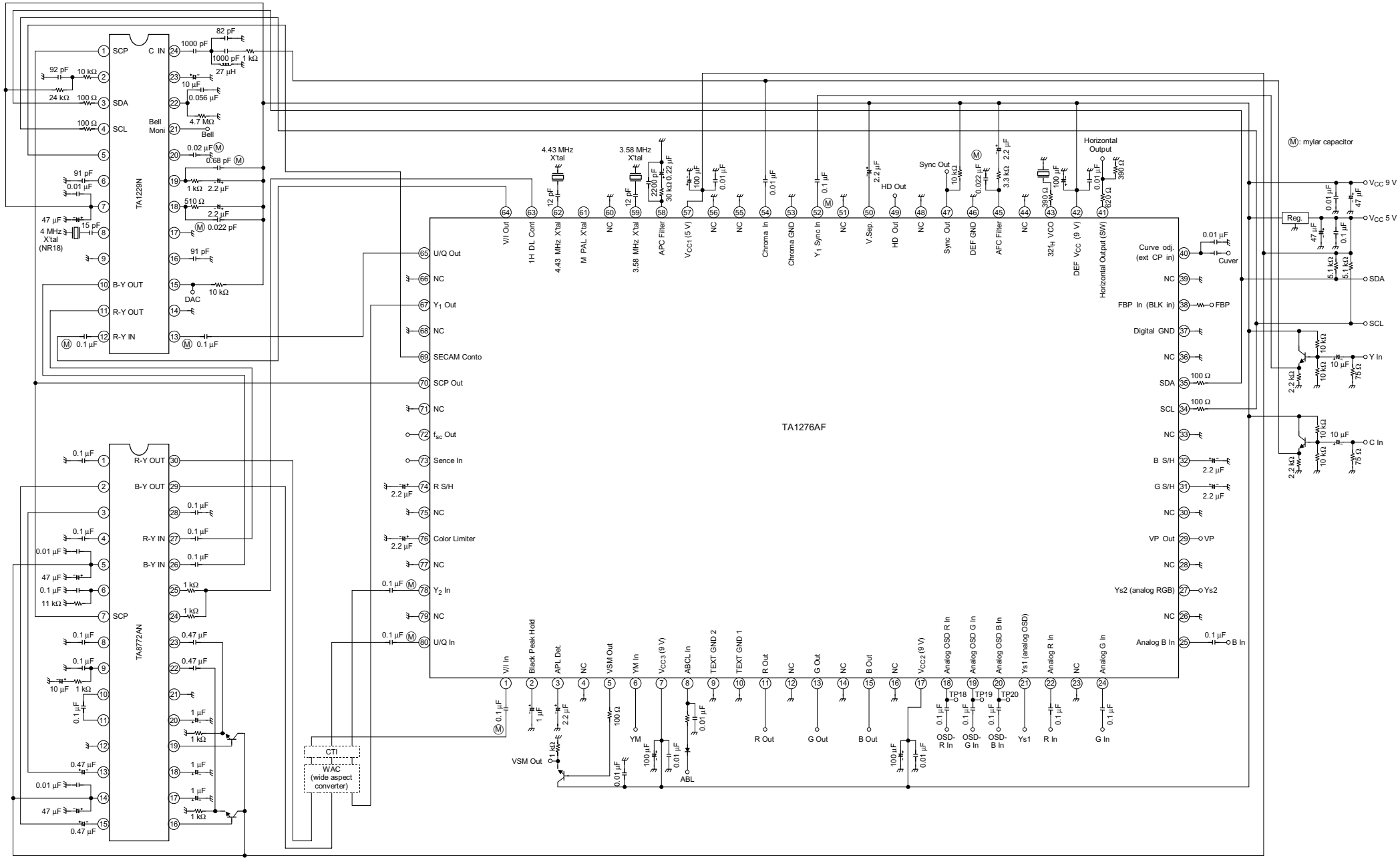

Application Circuit 4-Normal Scan (3.58 NTSC/M-PAL/N-PAL)

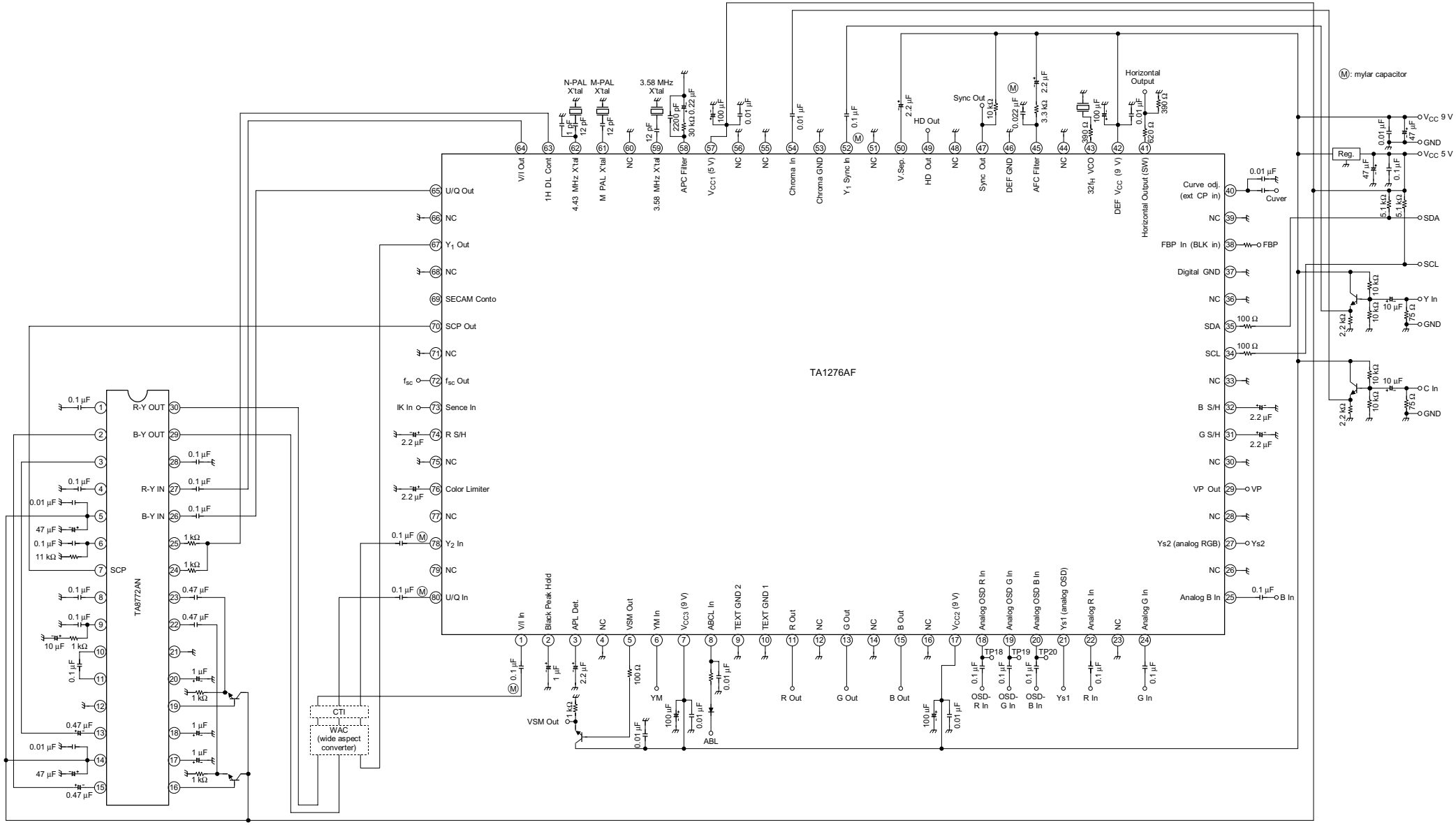

Application Circuit 5-Double Scan (3.58 NTSC)

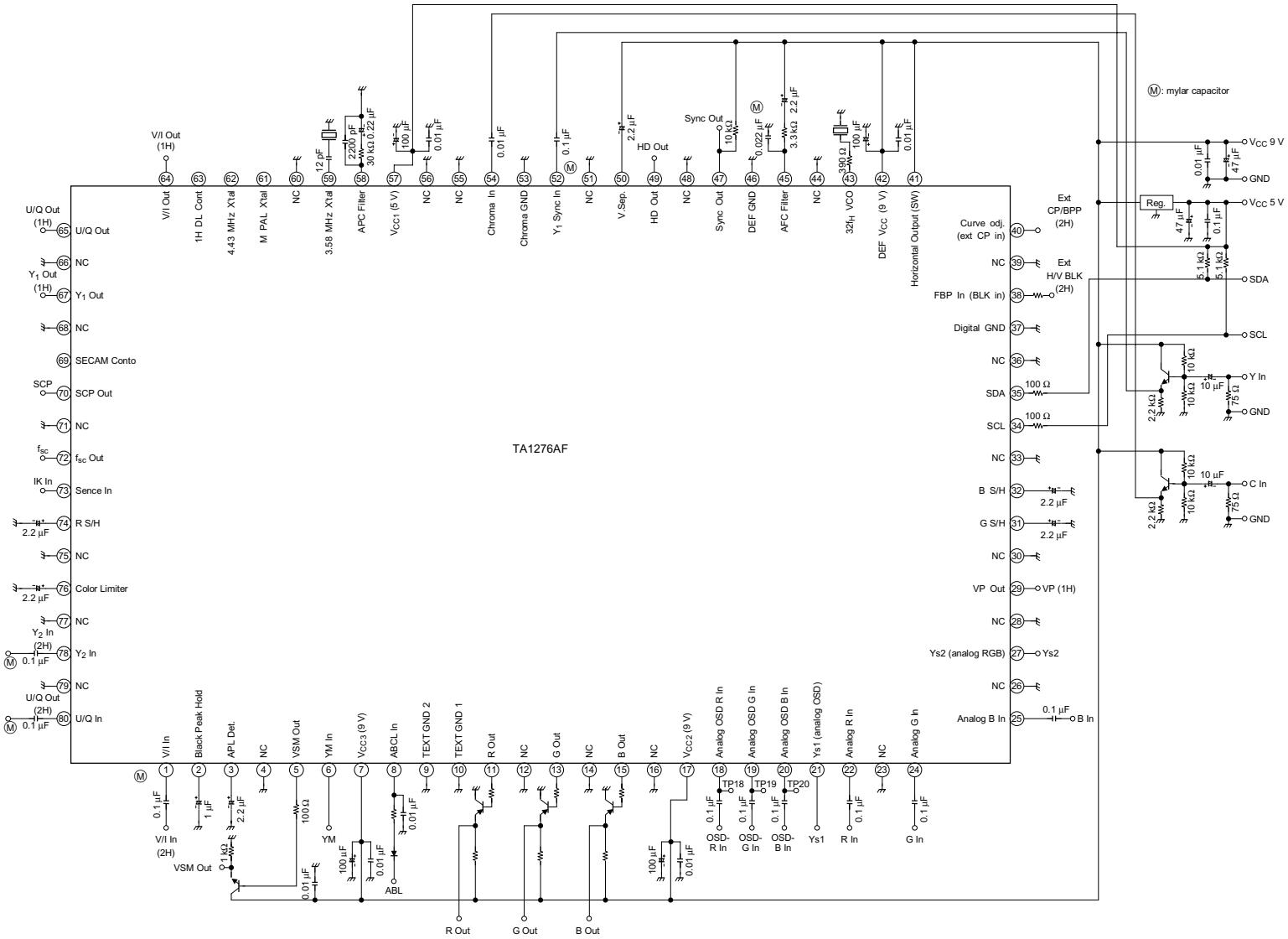

AKB Application Circuit

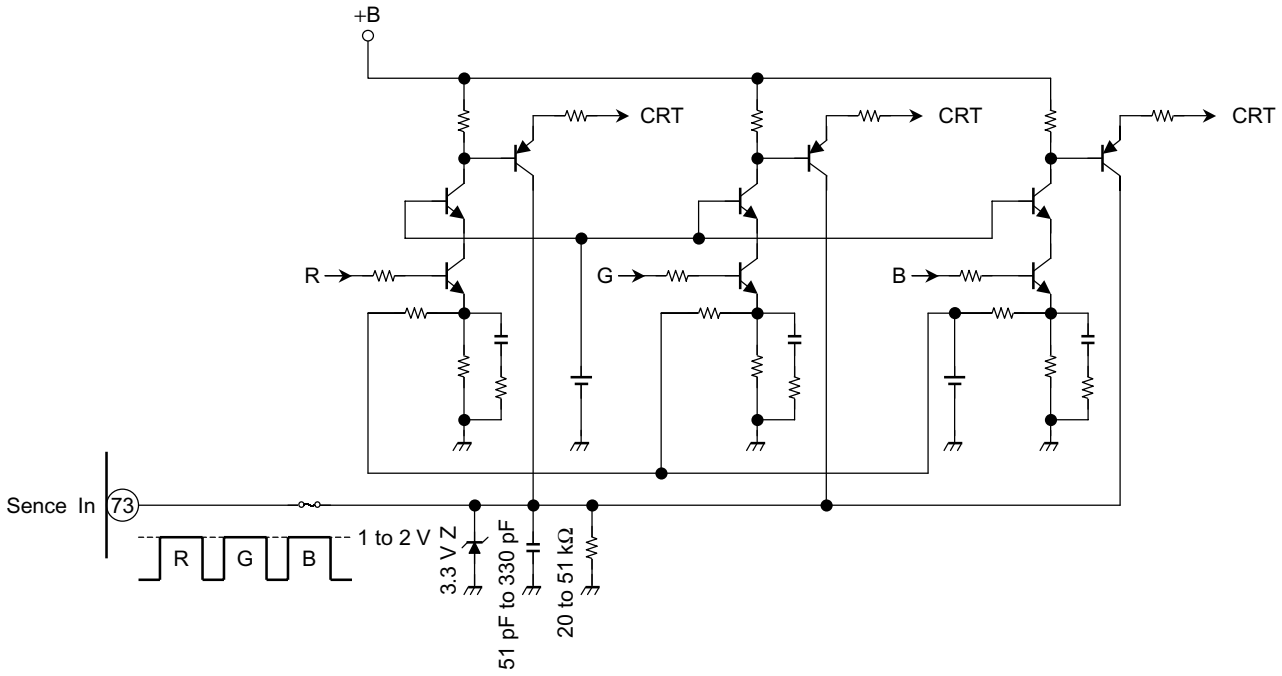

Package Dimensions

QFP80-P-1420-0.80F Unit: mm

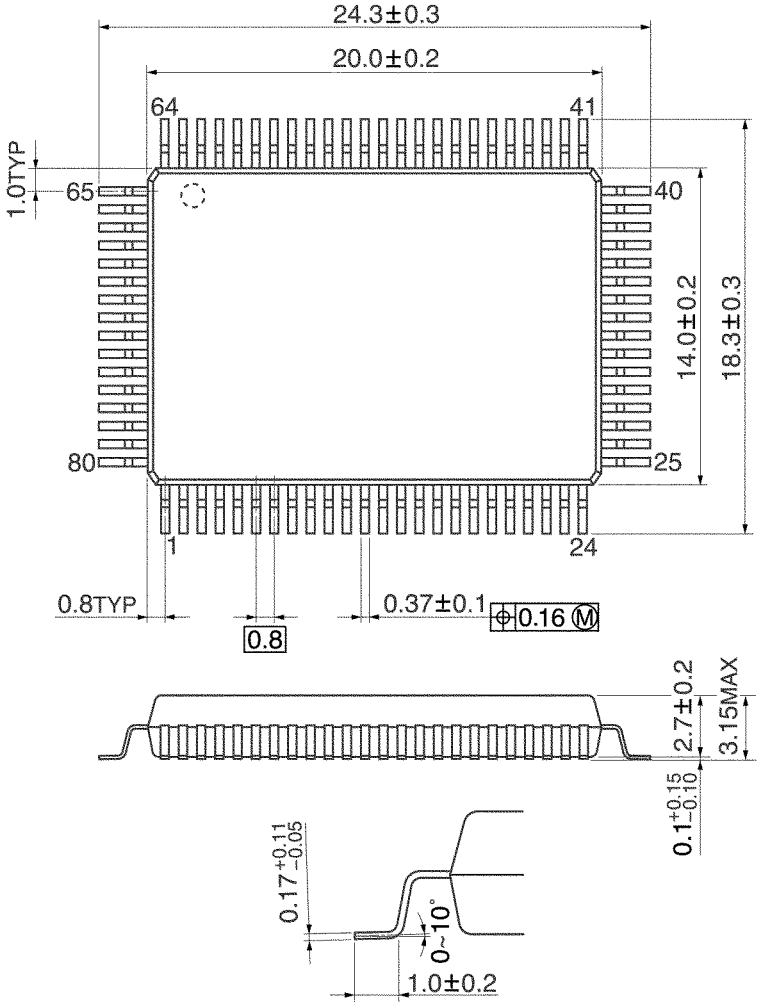

Weight: 1.6 g (typ.)

RESTRICTIONS ON PRODUCT USE

000707EBA

- TOSHIBA is continually working to improve the quality and reliability of its products. Nevertheless, semiconductor devices in general can malfunction or fail due to their inherent electrical sensitivity and vulnerability to physical stress. It is the responsibility of the buyer, when utilizing TOSHIBA products, to comply with the standards of safety in making a safe design for the entire system, and to avoid situations in which a malfunction or failure of such TOSHIBA products could cause loss of human life, bodily injury or damage to property.
  In developing your designs, please ensure that TOSHIBA products are used within specified operating ranges as set forth in the most recent TOSHIBA products specifications. Also, please keep in mind the precautions and conditions set forth in the “Handling Guide for Semiconductor Devices,” or “TOSHIBA Semiconductor Reliability Handbook” etc..
- The TOSHIBA products listed in this document are intended for usage in general electronics applications (computer, personal equipment, office equipment, measuring equipment, industrial robotics, domestic appliances, etc.). These TOSHIBA products are neither intended nor warranted for usage in equipment that requires extraordinarily high quality and/or reliability or a malfunction or failure of which may cause loss of human life or bodily injury (“Unintended Usage”). Unintended Usage include atomic energy control instruments, airplane or spaceship instruments, transportation instruments, traffic signal instruments, combustion control instruments, medical instruments, all types of safety devices, etc.. Unintended Usage of TOSHIBA products listed in this document shall be made at the customer’s own risk.
- The products described in this document are subject to the foreign exchange and foreign trade laws.
- The information contained herein is presented only as a guide for the applications of our products. No responsibility is assumed by TOSHIBA CORPORATION for any infringements of intellectual property or other rights of the third parties which may result from its use. No license is granted by implication or otherwise under any intellectual property or other rights of TOSHIBA CORPORATION or others.
- The information contained herein is subject to change without notice.