LMS33460 3V Under Voltage Detector

Check for Samples: LMS33460

FEATURES

- **Ultra Low Power**
- **3.0V Detection**
- **V_{IN} Range: 0.8V to 7.0V**
- **Open Drain Output**
- **Ultra-small SC70-5 Package**
- **Extended Temperature Range (−40°C to 85°C)**
- **Ultra Low Quiescent Current (1µA typ)**

APPLICATIONS

- **Low Battery Voltage Detector**
- **Power Fail Indicator**
- **Processor Reset Generator**
- **Battery Backup Control**
- **Battery Operated Equipment**
- **Hand-held Instruments**

DESCRIPTION

The LMS33460 is an under voltage detector with a 3.0V threshold and extremely low power consumption. The LMS33460 is specifically designed to accurately monitor power supplies. It is especially suited to battery powered systems where low quiescent current and small size are required. This IC generates an active output whenever the input voltage drops below 3.0 Volts.

This part uses a precision on-chip voltage reference and a comparator to measure the input voltage. Built in hysteresis helps to prevent erratic operation in the presence of noise. The UVD is available in the ultra-miniature SC70-5 package.

Typical Application

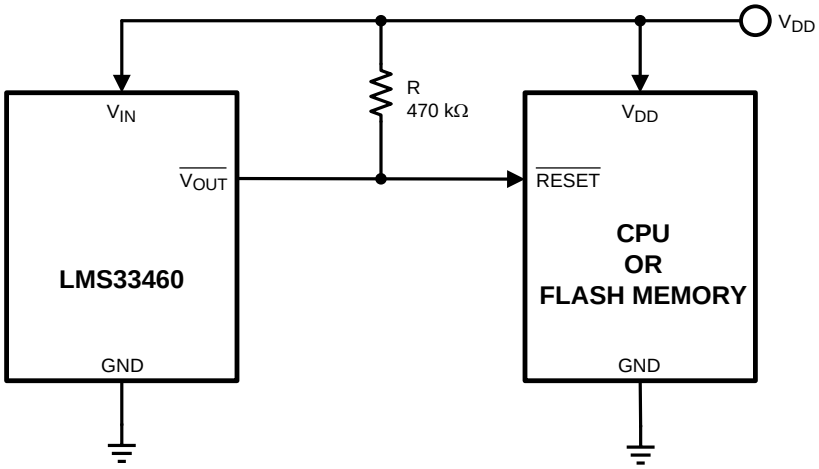

Connection Diagram

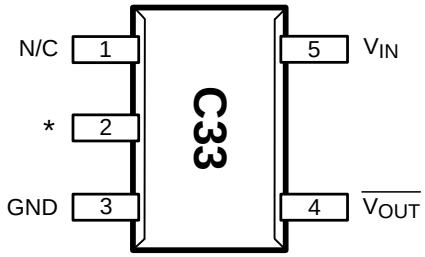

* Pin 2 is internally connected to Pin 3 (GND).
Pin 2 should be left open or connected to ground.

Figure 1. SC70-5
Top View

Block Diagram

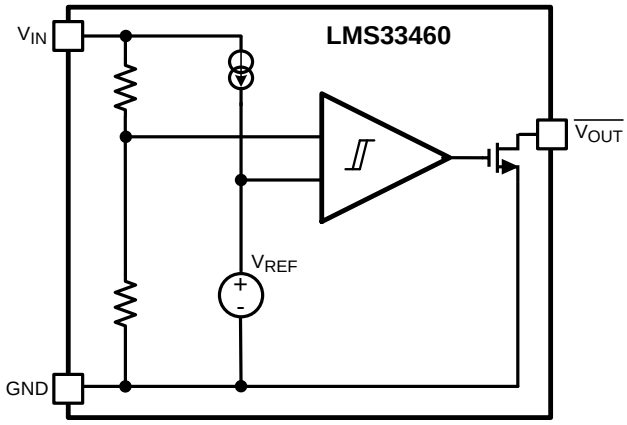

These devices have limited built-in ESD protection. The leads should be shorted together or the device placed in conductive foam during storage or handling to prevent electrostatic damage to the MOS gates.

ABSOLUTE MAXIMUM RATINGS[1]

Input Voltage to GND	8.0V
Output Voltage to GND	8.0V
Output Continuous Output Current	30mA
Vapor Phase IR Convection Reflow	240°C
ESD Rating [2]	
Human Body Model	2500V
Machine Model	200V
T_{JMAX} [3]	150°C
θ_{JA} [3]	478°C/W

(1) Absolute maximum ratings indicate limits beyond which damage to the device may occur. Electrical specifications do not apply when operating the device beyond its rated operating conditions.
(2) Human Body Model (HBM): 1.5kΩ in series with 100pF; Machine Model (MM): 0Ω in series with 200pF.
(3) Quiescent current will increase substantially above 5.5 volts, but is very low in the normal range below 5.5 volts.

TEMPERATURE RANGE

Operating Junction	−40°C to +85°C
Storage Temperature Range	−65°C to +150°C

ELECTRICAL CHARACTERISTICS

Unless otherwise specified, all limits specified for T_J = 25°C. **Boldface** limits apply at the temperature extremes.

Symbol	Parameter	Conditions	Min	Typ	Max	Units
V_{DET}	Detector Threshold	V_{IN} Falling	2.85	3.0	3.15	V
V_{HYS}	Detector Voltage Hysteresis	V_{IN} Rising	0.095	0.155	0.215	V
I_{IN}	Input Supply Current	V_{IN} = 2.87V	–	1.0	2.2	µA
		V_{IN} = 4.7V	–	1.2	3.6	µA
		V_{IN} = 7.0V [1]	–	25	200	µA
$V_{IN(MAX)}$	Maximum Operating Voltage		–	–	7.0	V
$V_{IN(MIN)}$	Minimum Operating Voltage [2]		–	0.7 **1.0**	1.1 **1.3**	V
$I_{OUT(LOW)}$	Output Current Low	V_{OUT} = 0.05V, V_{IN} = 1.1V V_{OUT} = 0.50V, V_{IN} = 1.5V	0.01 2	0.6 11	–	mA
t_{PDHL}	Output Delay Time Output Transition High to Low C_L = 10pF, R_L = 470kΩ		–	130	200	µsec
$\Delta V_{DET}/\Delta T$	Detect Voltage Temperature Coefficient		–	**±120**	–	PPM/°C

(1) Quiescent current will increase substantially above 5.5 volts, but is very low in the normal range below 5.5 volts.
(2) Temperature range specifications is specified by design.

TYPICAL CHARACTERISTICS

(T_A = 25°C, R_L = 470 kΩ and C_L = 10 pF unless otherwise noted).

Detector Threshold vs. Temperature

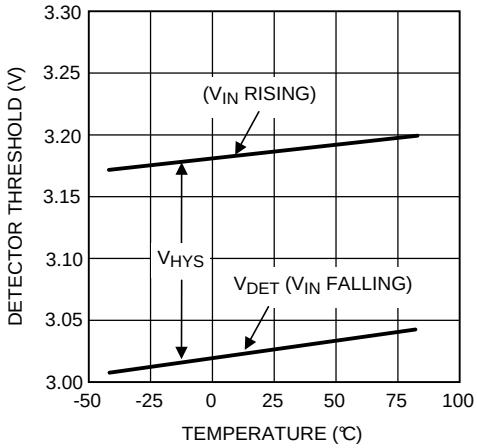

Figure 2.

Supply Current vs. Input Voltage

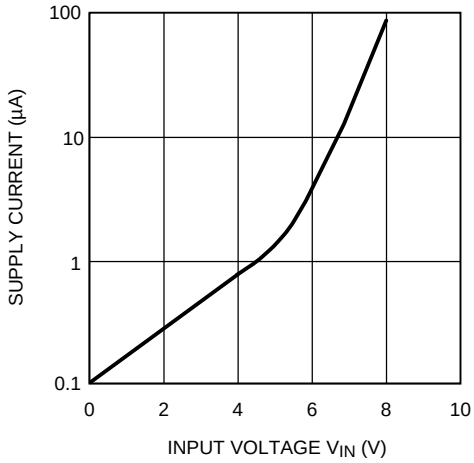

Figure 3.

Propagation Delay Time (t_{PDHL}) vs. Temperature

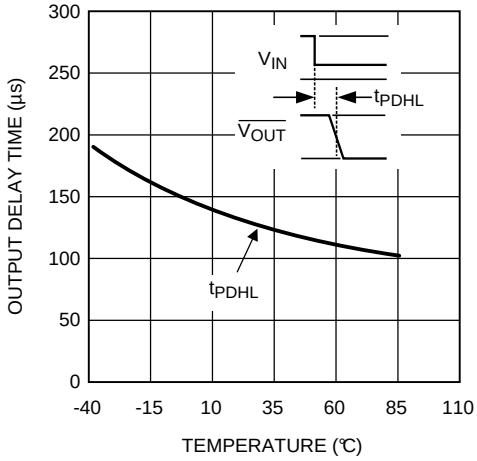

Figure 4.

Propagation Delay Time (t_{PDLH}) vs. Temperature

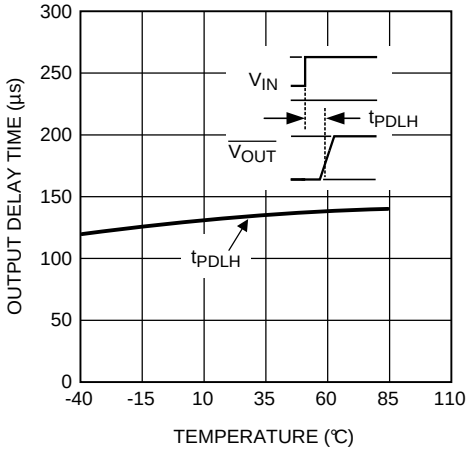

Figure 5.

$V_{OUT(LOW)}$ vs. V_{IN}

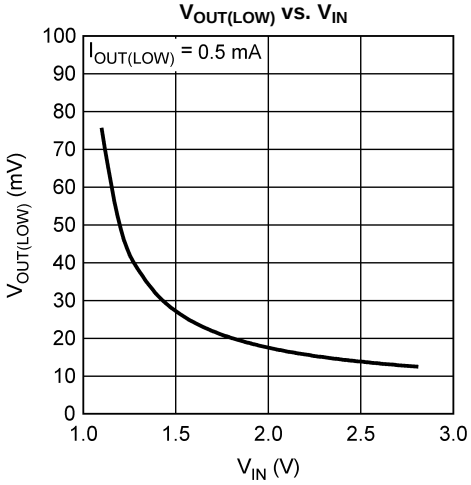

Figure 6.

APPLICATION CIRCUIT INFORMATION

The LMS33460 is a micro power under voltage sensing circuit with an open drain output configuration, which requires a pull resistor.

The LMS33460 features a voltage reference, a comparator with precise thresholds and built in hysteresis to prevent erratic reset operation.

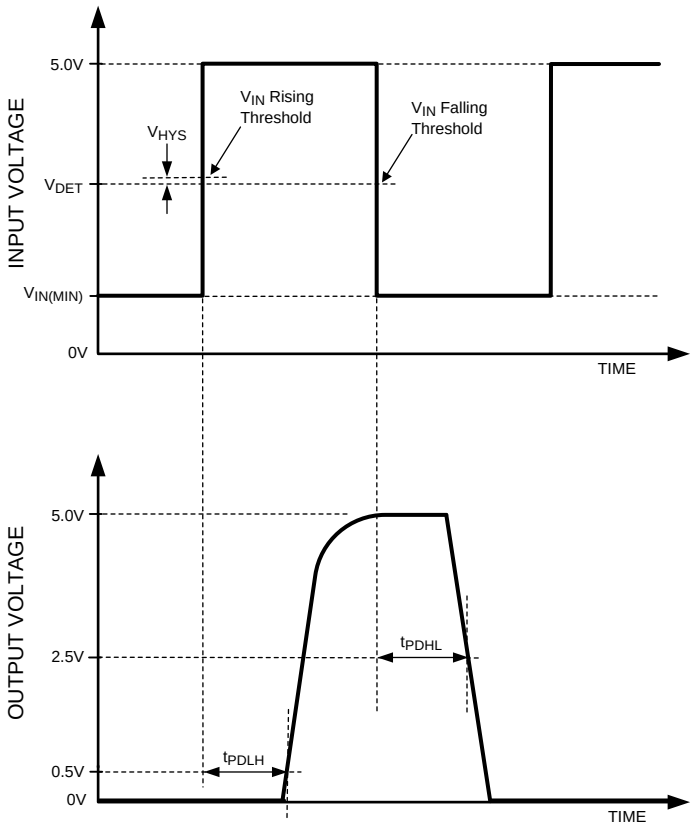

Figure 7. Propagation Delay Timing Diagram

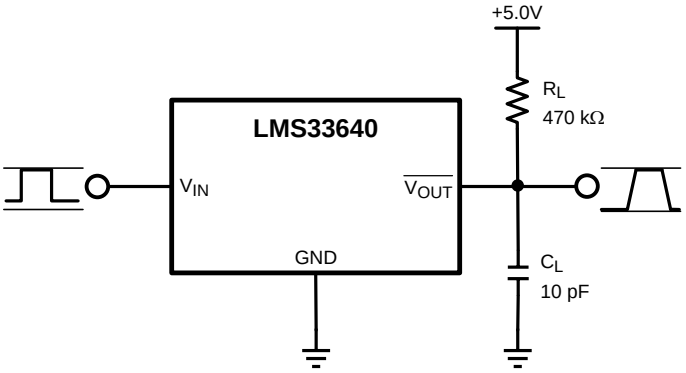

Figure 8. Propagation Delay Test Circuit

PACKAGING INFORMATION

Orderable Device	Status (1)	Package Type	Package Drawing	Pins	Package Qty	Eco Plan (2)	Lead/Ball Finish	MSL Peak Temp (3)	Op Temp (°C)	Top-Side Markings (4)	Samples
LMS33460MG	ACTIVE	SC70	DCK	5	1000	TBD	CU SNPB	Level-1-260C-UNLIM	-40 to 85	C33	Samples
LMS33460MG/NOPB	ACTIVE	SC70	DCK	5	1000	Green (RoHS & no Sb/Br)	CU SN	Level-1-260C-UNLIM	-40 to 85	C33	Samples

(1) The marketing status values are defined as follows:
ACTIVE: Product device recommended for new designs.
LIFEBUY: TI has announced that the device will be discontinued, and a lifetime-buy period is in effect.
NRND: Not recommended for new designs. Device is in production to support existing customers, but TI does not recommend using this part in a new design.
PREVIEW: Device has been announced but is not in production. Samples may or may not be available.
OBSOLETE: TI has discontinued the production of the device.

(2) Eco Plan - The planned eco-friendly classification: Pb-Free (RoHS), Pb-Free (RoHS Exempt), or Green (RoHS & no Sb/Br) - please check http://www.ti.com/productcontent for the latest availability information and additional product content details.
TBD: The Pb-Free/Green conversion plan has not been defined.
Pb-Free (RoHS): TI's terms "Lead-Free" or "Pb-Free" mean semiconductor products that are compatible with the current RoHS requirements for all 6 substances, including the requirement that lead not exceed 0.1% by weight in homogeneous materials. Where designed to be soldered at high temperatures, TI Pb-Free products are suitable for use in specified lead-free processes.
Pb-Free (RoHS Exempt): This component has a RoHS exemption for either 1) lead-based flip-chip solder bumps used between the die and package, or 2) lead-based die adhesive used between the die and leadframe. The component is otherwise considered Pb-Free (RoHS compatible) as defined above.
Green (RoHS & no Sb/Br): TI defines "Green" to mean Pb-Free (RoHS compatible), and free of Bromine (Br) and Antimony (Sb) based flame retardants (Br or Sb do not exceed 0.1% by weight in homogeneous material)

(3) MSL, Peak Temp. -- The Moisture Sensitivity Level rating according to the JEDEC industry standard classifications, and peak solder temperature.

(4) Only one of markings shown within the brackets will appear on the physical device.

DCK (R–PDSO–G5) PLASTIC SMALL–OUTLINE PACKAGE

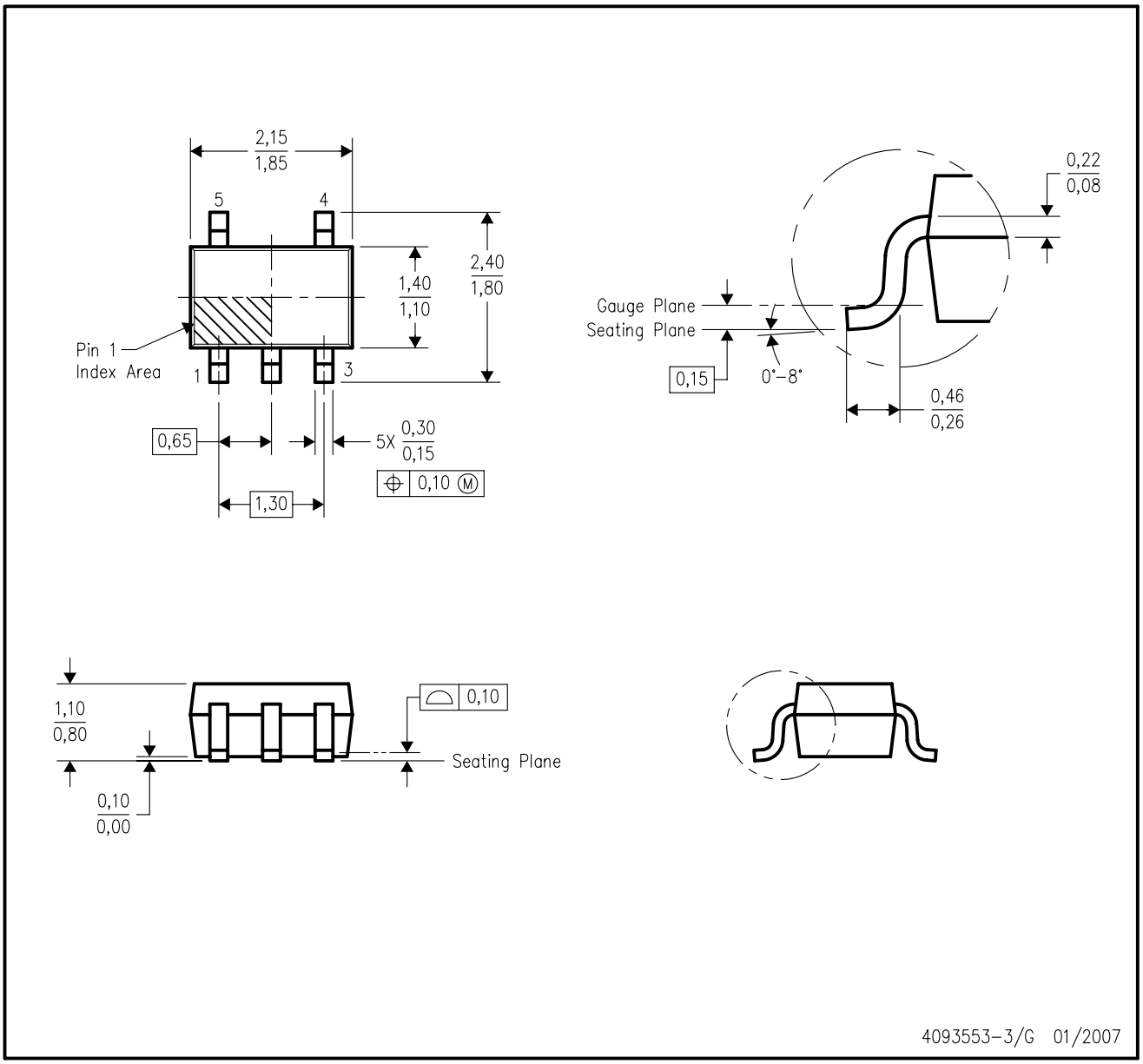

NOTES:
A. All linear dimensions are in millimeters.
B. This drawing is subject to change without notice.
C. Body dimensions do not include mold flash or protrusion. Mold flash and protrusion shall not exceed 0.15 per side.
D. Falls within JEDEC MO–203 variation AA.