LM2588 SIMPLE SWITCHER® 5A Flyback Regulator with Shutdown

Check for Samples: LM2588

FEATURES

- **Requires Few External Components**
- **Family of Standard Inductors and Transformers**
- **NPN Output Switches 5.0A, Can Stand Off 65V**
- **Wide Input Voltage Range: 4V to 40V**
- **Adjustable Switching Frequency: 100 kHz to 200 kHz**
- **External Shutdown Capability**
- **Draws Less Than 60 µA When Shut Down**
- **Frequency Synchronization**
- **Current-mode Operation for Improved Transient Response, Line Regulation, and Current Limit**
- **Internal Soft-start Function Reduces In-rush Current During Start-up**
- **Output Transistor Protected by Current Limit, Under Voltage Lockout, and Thermal Shutdown**
- **System Output Voltage Tolerance of ±4% Max Over Line and Load Conditions**

TYPICAL APPLICATIONS

- **Flyback Regulator**
- **Forward Converter**
- **Multiple-output Regulator**
- **Simple Boost Regulator**

DESCRIPTION

The LM2588 series of regulators are monolithic integrated circuits specifically designed for flyback, step-up (boost), and forward converter applications. The device is available in 4 different output voltage versions: 3.3V, 5.0V, 12V, and adjustable.

Requiring a minimum number of external components, these regulators are cost effective, and simple to use. Included in the datasheet are typical circuits of boost and flyback regulators. Also listed are selector guides for diodes and capacitors and a family of standard inductors and flyback transformers designed to work with these switching regulators.

The power switch is a 5.0A NPN device that can stand-off 65V. Protecting the power switch are current and thermal limiting circuits, and an undervoltage lockout circuit. This IC contains an adjustable frequency oscillator that can be programmed up to 200 kHz. The oscillator can also be synchronized with other devices, so that multiple devices can operate at the same switching frequency.

Other features include soft start mode to reduce in-rush current during start up, and current mode control for improved rejection of input voltage and output load transients and cycle-by-cycle current limiting. The device also has a shutdown pin, so that it can be turned off externally. An output voltage tolerance of ±4%, within specified input voltages and output load conditions, is ensured for the power supply system.

Connection Diagrams

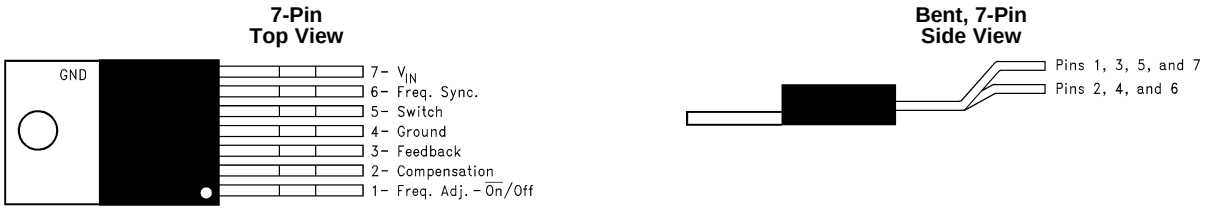

Figure 1. LM2588T-12 or LM2588T-ADJ
See Package Number NDZ0007B

Please be aware that an important notice concerning availability, standard warranty, and use in critical applications of Texas Instruments semiconductor products and disclaimers thereto appears at the end of this data sheet.

Switchers Made Simple is a trademark of Texas Instruments.
SIMPLE SWITCHER is a registered trademark of Texas Instruments.
Switchers Made Simple is a registered trademark of dcl_owner.
All other trademarks are the property of their respective owners.

PRODUCTION DATA information is current as of publication date. Products conform to specifications per the terms of the Texas Instruments standard warranty. Production processing does not necessarily include testing of all parameters.

Copyright © 2004–2005, Texas Instruments Incorporated

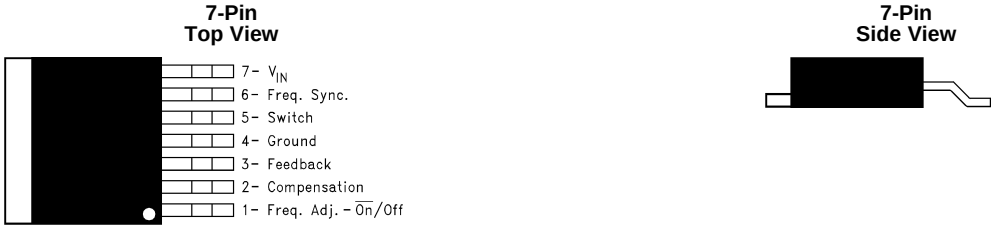

Figure 2. LM2588S-12 or LM2588S-ADJ
See Package Number KTW0007B

These devices have limited built-in ESD protection. The leads should be shorted together or the device placed in conductive foam during storage or handling to prevent electrostatic damage to the MOS gates.

Copyright © 2004–2005, Texas Instruments Incorporated

Absolute Maximum Ratings[1][2]

Input Voltage		−0.4V ≤ V_{IN} ≤ 45V
Switch Voltage		−0.4V ≤ V_{SW} ≤ 65V
Switch Current[3]		Internally Limited
Compensation Pin Voltage		−0.4V ≤ V_{COMP} ≤ 2.4V
Feedback Pin Voltage		−0.4V ≤ V_{FB} ≤ 2 V_{OUT}
$\overline{ON}$ /OFF Pin Voltage		−0.4V ≤ V_{SH} ≤ 6V
Sync Pin Voltage		−0.4V ≤ V_{SYNC} ≤ 2V
Power Dissipation[4]		Internally Limited
Storage Temperature Range		−65°C to +150°C
Lead Temperature	(Soldering, 10 sec.)	260°C
Maximum Junction Temperature[4]		150°C
Minimum ESD Rating	(C = 100 pF, R = 1.5 kΩ)	2 kV

(1) Absolute Maximum Ratings indicate limits beyond which damage to the device may occur. These ratings apply when the current is limited to less than 1.2 mA for pins 1, 2, 3, and 6. Operating ratings indicate conditions for which the device is intended to be functional, but device parameter specifications may not be ensured under these conditions. For ensured specifications and test conditions, see the Electrical Characteristics.
(2) If Military/Aerospace specified devices are required, please contact the TI Sales Office/ Distributors for availability and specifications.
(3) Note that switch current and output current are not identical in a step-up regulator. Output current cannot be internally limited when the LM2588 is used as a step-up regulator. To prevent damage to the switch, the output current must be externally limited to 5A. However, output current is internally limited when the LM2588 is used as a flyback regulator (see the Application Hints section for more information).
(4) The junction temperature of the device (T_J) is a function of the ambient temperature (T_A), the junction-to-ambient thermal resistance (θ_{JA}), and the power dissipation of the device (P_D). A thermal shutdown will occur if the temperature exceeds the maximum junction temperature of the device: $P_D \times \theta_{JA} + T_{A(MAX)} \geq T_{J(MAX)}$. For a safe thermal design, check that the maximum power dissipated by the device is less than: $P_D \leq [T_{J(MAX)} - T_{A(MAX)}]/\theta_{JA}$. When calculating the maximum allowable power dissipation, derate the maximum junction temperature—this ensures a margin of safety in the thermal design.

Operating Ratings

Supply Voltage	4V ≤ V_{IN} ≤ 40V
Output Switch Voltage	0V ≤ V_{SW} ≤ 60V
Output Switch Current	I_{SW} ≤ 5.0A
Junction Temperature Range	−40°C ≤ T_J ≤ +125°C

Copyright © 2004–2005, Texas Instruments Incorporated

LM2588-3.3 Electrical Characteristics

Specifications with standard type face are for T_J = 25°C, and those in **bold type face** apply over full **Operating Temperature Range.** Unless otherwise specified, V_{IN} = 5V.

Symbol	Parameters	Conditions	Typical	Min	Max	Units
SYSTEM PARAMETERS Test Circuit of Figure 18(1)						
V_{OUT}	Output Voltage	V_{IN} = 4V to 12V I_{LOAD} = 400 mA to 1.75A	3.3	3.17/**3.14**	3.43/**3.46**	V
$\Delta V_{OUT}/\Delta V_{IN}$	Line Regulation	V_{IN} = 4V to 12V I_{LOAD} = 400 mA	20		50/**100**	mV
$\Delta V_{OUT}/\Delta I_{LOAD}$	Load Regulation	V_{IN} = 12V I_{LOAD} = 400 mA to 1.75A	20		50/**100**	mV
η	Efficiency	V_{IN} = 12V, I_{LOAD} = 1A	75			%
UNIQUE DEVICE PARAMETERS(2)						
V_{REF}	Output Reference Voltage	Measured at Feedback Pin V_{COMP} = 1.0V	3.3	3.242/**3.234**	3.358/**3.366**	V
ΔV_{REF}	Reference Voltage Line Regulation	V_{IN} = 4V to 40V	2.0			mV
G_M	Error Amp Transconductance	I_{COMP} = −30 µA to +30 µA V_{COMP} = 1.0V	1.193	**0.678**	**2.259**	mmho
A_{VOL}	Error Amp Voltage Gain	V_{COMP} = 0.5V to 1.6V R_{COMP} = 1.0 MΩ(3)	260	151/**75**		V/V

(1) External components such as the diode, inductor, input and output capacitors can affect switching regulator performance. When the LM2588 is used as shown in Figure 18 and Figure 19, system performance will be as specified by the system parameters.
(2) All room temperature limits are 100% production tested, and all limits at temperature extremes are specified via correlation using standard Statistical Quality Control (SQC) methods.
(3) A 1.0 MΩ resistor is connected to the compensation pin (which is the error amplifier output) to ensure accuracy in measuring A_{VOL}.

Copyright © 2004–2005, Texas Instruments Incorporated

LM2588-5.0 Electrical Characteristics

Specifications with standard type face are for T_J = 25°C, and those in **bold type face** apply over full **Operating Temperature Range.** Unless otherwise specified, V_{IN} = 5V.

Symbol	Parameters	Conditions	Typical	Min	Max	Units
SYSTEM PARAMETERS Test Circuit of Figure 18(1)						
V_{OUT}	Output Voltage	V_{IN} = 4V to 12V I_{LOAD} = 500 mA to 1.45A	5.0	4.80/**4.75**	5.20/**5.25**	V
$\Delta V_{OUT}/\Delta V_{IN}$	Line Regulation	V_{IN} = 4V to 12V I_{LOAD} = 500 mA	20		50/**100**	mV
$\Delta V_{OUT}/\Delta I_{LOAD}$	Load Regulation	V_{IN} = 12V I_{LOAD} = 500 mA to 1.45A	20		50/**100**	mV
η	Efficiency	V_{IN} = 12V, I_{LOAD} = 750 mA	80			%
UNIQUE DEVICE PARAMETERS(2)						
V_{REF}	Output Reference Voltage	Measured at Feedback Pin V_{COMP} = 1.0V	5.0	4.913/**4.900**	5.088/**5.100**	V
ΔV_{REF}	Reference Voltage Line Regulation	V_{IN} = 4V to 40V	3.3			mV
G_M	Error Amp Transconductance	I_{COMP} = −30 μA to +30 μA V_{COMP} = 1.0V	0.750	**0.447**	**1.491**	mmho
A_{VOL}	Error Amp Voltage Gain	V_{COMP} = 0.5V to 1.6V R_{COMP} = 1.0 MΩ(3)	165	99/**49**		V/V

(1) External components such as the diode, inductor, input and output capacitors can affect switching regulator performance. When the LM2588 is used as shown in Figure 18 and Figure 19, system performance will be as specified by the system parameters.
(2) All room temperature limits are 100% production tested, and all limits at temperature extremes are specified via correlation using standard Statistical Quality Control (SQC) methods.
(3) A 1.0 MΩ resistor is connected to the compensation pin (which is the error amplifier output) to ensure accuracy in measuring A_{VOL}.

Copyright © 2004–2005, Texas Instruments Incorporated

LM2588-12 Electrical Characteristics

Specifications with standard type face are for T_J = 25°C, and those in **bold type face** apply over full **Operating Temperature Range.** Unless otherwise specified, V_{IN} = 5V.

Symbol	Parameters	Conditions	Typical	Min	Max	Units
SYSTEM PARAMETERS Test Circuit of Figure 19(1)						
V_{OUT}	Output Voltage	V_{IN} = 4V to 10V I_{LOAD} = 300 mA to 1.2A	12.0	11.52/**11.40**	12.48/**12.60**	V
$\Delta V_{OUT}/\Delta V_{IN}$	Line Regulation	V_{IN} = 4V to 10V I_{LOAD} = 300 mA	20		100/**200**	mV
$\Delta V_{OUT}/\Delta I_{LOAD}$	Load Regulation	V_{IN} = 10V I_{LOAD} = 300 mA to 1.2A	20		100/**200**	mV
η	Efficiency	V_{IN} = 10V, I_{LOAD} = 1A	90			%
UNIQUE DEVICE PARAMETERS(2)						
V_{REF}	Output Reference Voltage	Measured at Feedback Pin V_{COMP} = 1.0V	12.0	11.79/**11.76**	12.21/**12.24**	V
ΔV_{REF}	Reference Voltage Line Regulation	V_{IN} = 4V to 40V	7.8			mV
G_M	Error Amp Transconductance	I_{COMP} = −30 μA to +30 μA V_{COMP} = 1.0V	0.328	**0.186**	**0.621**	mmho
A_{VOL}	Error Amp Voltage Gain	V_{COMP} = 0.5V to 1.6V R_{COMP} = 1.0 MΩ(3)	70	41/**21**		V/V

(1) External components such as the diode, inductor, input and output capacitors can affect switching regulator performance. When the LM2588 is used as shown in Figure 18 and Figure 19, system performance will be as specified by the system parameters.
(2) All room temperature limits are 100% production tested, and all limits at temperature extremes are specified via correlation using standard Statistical Quality Control (SQC) methods.
(3) A 1.0 MΩ resistor is connected to the compensation pin (which is the error amplifier output) to ensure accuracy in measuring A_{VOL}.

Copyright © 2004–2005, Texas Instruments Incorporated

LM2588-ADJ Electrical Characteristics

Specifications with standard type face are for T_J = 25°C, and those in **bold type face** apply over full **Operating Temperature Range.** Unless otherwise specified, V_{IN} = 5V.

Symbol	Parameters	Conditions	Typical	Min	Max	Units
SYSTEM PARAMETERS Test Circuit of Figure 19(1)						
V_{OUT}	Output Voltage	V_{IN} = 4V to 10V I_{LOAD} = 300 mA to 1.2A	12.0	11.52/**11.40**	12.48/**12.60**	V
$\Delta V_{OUT}/\Delta V_{IN}$	Line Regulation	V_{IN} = 4V to 10V I_{LOAD} = 300 mA	20		100/**200**	mV
$\Delta V_{OUT}/\Delta I_{LOAD}$	Load Regulation	V_{IN} = 10V I_{LOAD} = 300 mA to 1.2A	20		100/**200**	mV
η	Efficiency	V_{IN} = 10V, I_{LOAD} = 1A	90			%
UNIQUE DEVICE PARAMETERS(2)						
V_{REF}	Output Reference Voltage	Measured at Feedback Pin V_{COMP} = 1.0V	1.230	1.208/**1.205**	1.252/**1.255**	V
ΔV_{REF}	Reference Voltage Line Regulation	V_{IN} = 4V to 40V	1.5			mV
G_M	Error Amp Transconductance	I_{COMP} = −30 μA to +30 μA V_{COMP} = 1.0V	3.200	**1.800**	**6.000**	mmho
A_{VOL}	Error Amp Voltage Gain	V_{COMP} = 0.5V to 1.6V R_{COMP} = 1.0 MΩ(3)	670	400/**200**		V/V
I_B	Error Amp Input Bias Current	V_{COMP} = 1.0V	125		425/**600**	nA

(1) External components such as the diode, inductor, input and output capacitors can affect switching regulator performance. When the LM2588 is used as shown in Figure 18 and Figure 19, system performance will be as specified by the system parameters.
(2) All room temperature limits are 100% production tested, and all limits at temperature extremes are specified via correlation using standard Statistical Quality Control (SQC) methods.
(3) A 1.0 MΩ resistor is connected to the compensation pin (which is the error amplifier output) to ensure accuracy in measuring A_{VOL}.

All Output Voltage Versions Electrical Characteristics(1)

Specifications with standard type face are for T_J = 25°C, and those in **bold type face** apply over full **Operating Temperature Range.** Unless otherwise specified, V_{IN} = 5V.

Symbol	Parameters	Conditions	Typical	Min	Max	Units
I_S	Input Supply Current	Switch Off(2)	11		15.5/**16.5**	mA
		I_{SWITCH} = 3.0A	85		140/**165**	mA
$I_{S/D}$	Shutdown Input Supply Current	V_{SH} = 3V	16		100/**300**	μA
V_{UV}	Input Supply Undervoltage Lockout	R_{LOAD} = 100Ω	3.30	**3.05**	**3.75**	V
f_O	Oscillator Frequency	Measured at Switch Pin R_{LOAD} = 100Ω, V_{COMP} = 1.0V Freq. Adj. Pin Open (Pin 1)	100	85/**75**	115/**125**	kHz
		R_{SET} = 22 kΩ	200			kHz
f_{SC}	Short-Circuit Frequency	Measured at Switch Pin R_{LOAD} = 100Ω $V_{FEEDBACK}$ = 1.15V	25			kHz
V_{EAO}	Error Amplifier Output Swing	Upper Limit(3)	2.8	2.6/**2.4**		V
		Lower Limit(2)	0.25		0.40/**0.55**	V

(1) All room temperature limits are 100% production tested, and all limits at temperature extremes are specified via correlation using standard Statistical Quality Control (SQC) methods.
(2) To measure this parameter, the feedback voltage is set to a high value, depending on the output version of the device, to force the error amplifier output low and the switch off.
(3) To measure this parameter, the feedback voltage is set to a low value, depending on the output version of the device, to force the error amplifier output high and the switch on.

Copyright © 2004–2005, Texas Instruments Incorporated

All Output Voltage Versions Electrical Characteristics[1] (continued)

Specifications with standard type face are for T_J = 25°C, and those in **bold type face** apply over full **Operating Temperature Range.** Unless otherwise specified, V_{IN} = 5V.

Symbol	Parameters	Conditions	Typical	Min	Max	Units
I_{EAO}	Error Amp Output Current (Source or Sink)	See[4]	165	110/**70**	260/**320**	µA
I_{SS}	Soft Start Current	$V_{FEEDBACK}$ = 0.92V V_{COMP} = 1.0V	11.0	8.0/**7.0**	17.0/**19.0**	µA
D_{MAX}	Maximum Duty Cycle	R_{LOAD} = 100Ω[3]	98	93/**90**		%
I_L	Switch Leakage Current	Switch Off V_{SWITCH} = 60V	15		300/**600**	µA
V_{SUS}	Switch Sustaining Voltage	dV/dT = 1.5V/ns		65		V
V_{SAT}	Switch Saturation Voltage	I_{SWITCH} = 5.0A	0.7		1.1/**1.4**	V
I_{CL}	NPN Switch Current Limit		6.5	**5.0**	**9.5**	A
V_{STH}	Synchronization Threshold Voltage	F_{SYNC} = 200 kHz V_{COMP} = 1V, V_{IN} = 5V	0.75	0.625/**0.40**	0.875/**1.00**	V
I_{SYNC}	Synchronization Pin Current	V_{IN} = 5V V_{COMP} = 1V, V_{SYNC} = V_{STH}	100		**200**	µA
V_{SHTH}	$\overline{ON}$ /OFF Pin (Pin 1) Threshold Voltage	V_{COMP} = 1V[5]	1.6	1.0/**0.8**	2.2/**2.4**	V
I_{SH}	$\overline{ON}$ /OFF Pin (Pin 1) Current	V_{COMP} = 1V V_{SH} = V_{SHTH}	40	15/**10**	65/**75**	µA
θ_{JA} θ_{JA} θ_{JC}	Thermal Resistance	NDZ Package, Junction to Ambient[6] NDZ Package, Junction to Ambient[7] NDZ Package, Junction to Case	65 45 2			°C/W
θ_{JA} θ_{JA} θ_{JA} θ_{JC}		KTW Package, Junction to Ambient[8] KTW Package, Junction to Ambient[9] KTW Package, Junction to Ambient[10] KTW Package, Junction to Case	56 35 26 2			

(4) To measure the worst-case error amplifier output current, the LM2588 is tested with the feedback voltage set to its low value (specified in Note 3 under the All Output Voltage Versions Electrical Characteristics() table) and at its high value (specified in Note 2 under the All Output Voltage Versions Electrical Characteristics() table).
(5) When testing the minimum value, do not sink current from this pin—isolate it with a diode. If current is drawn from this pin, the frequency adjust circuit will begin operation (see Figure 54).
(6) Junction to ambient thermal resistance (no external heat sink) for the 7 lead TO-220 package mounted vertically, with ½ inch leads in a socket, or on a PC board with minimum copper area.
(7) Junction to ambient thermal resistance (no external heat sink) for the 7 lead TO-220 package mounted vertically, with ½ inch leads soldered to a PC board containing approximately 4 square inches of (1 oz.) copper area surrounding the leads.
(8) Junction to ambient thermal resistance for the 7 lead TO-263 mounted horizontally against a PC board area of 0.136 square inches (the same size as the TO-263 package) of 1 oz. (0.0014 in. thick) copper.
(9) Junction to ambient thermal resistance01242001 for the 7 lead TO-263 mounted horizontally against a PC board area of 0.4896 square inches (3.6 times the area of the TO-263 package) of 1 oz. (0.0014 in. thick) copper.
(10) Junction to ambient thermal resistance for the 7 lead TO-263 mounted horizontally against a PC board copper area of 1.0064 square inches (7.4 times the area of the TO-263 package) of 1 oz. (0.0014 in. thick) copper. Additional copper area will reduce thermal resistance further. See the thermal model in Switchers Made Simple® software.

Copyright © 2004–2005, Texas Instruments Incorporated

Typical Performance Characteristics

Supply Current vs Temperature

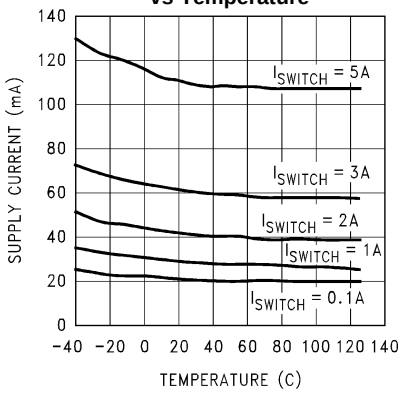

Figure 3.

Reference Voltage vs Temperature

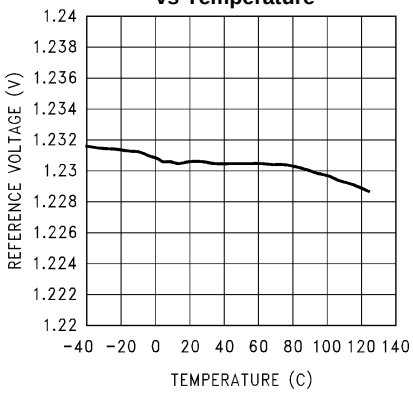

Figure 4.

ΔReference Voltage vs Supply Voltage

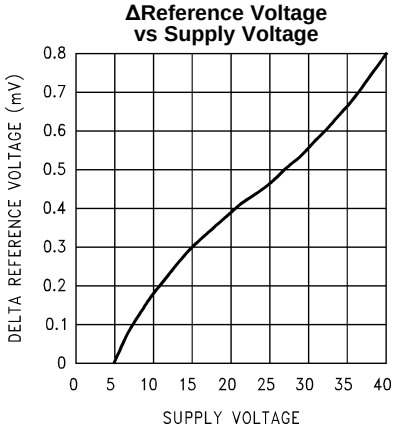

Figure 5.

Supply Current vs Switch Current

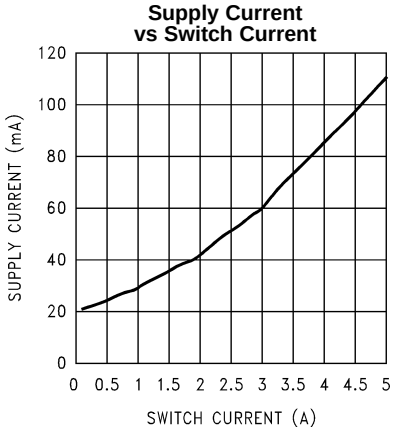

Figure 6.

Current Limit vs Temperature

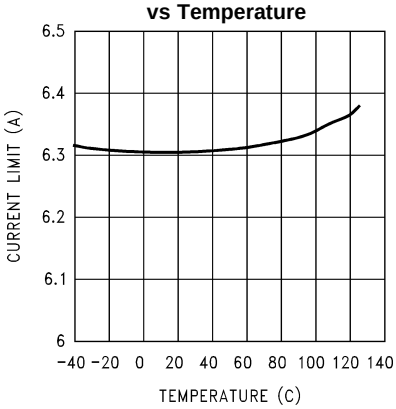

Figure 7.

Feedback Pin Bias Current vs Temperature

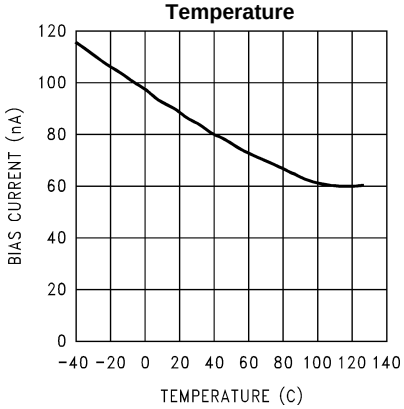

Figure 8.

Typical Performance Characteristics (continued)

Switch Saturation Voltage vs Temperature

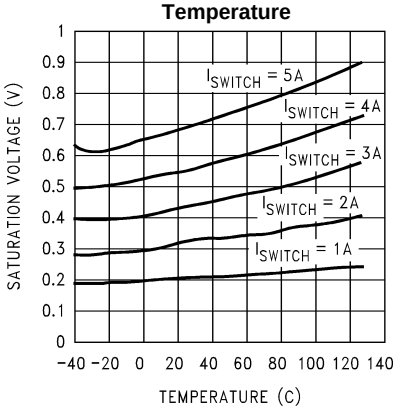

Figure 9.

Switch Transconductance vs Temperature

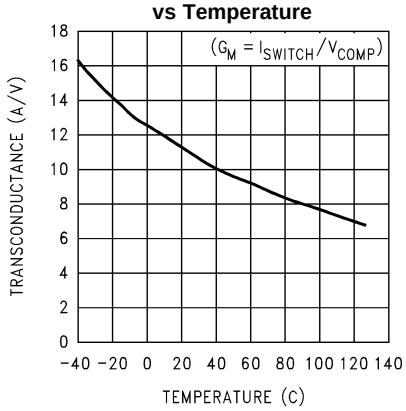

Figure 10.

Oscillator Frequency vs Temperature

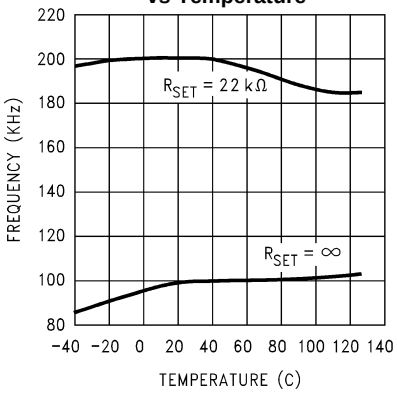

Figure 11.

Error Amp Transconductance vs Temperature

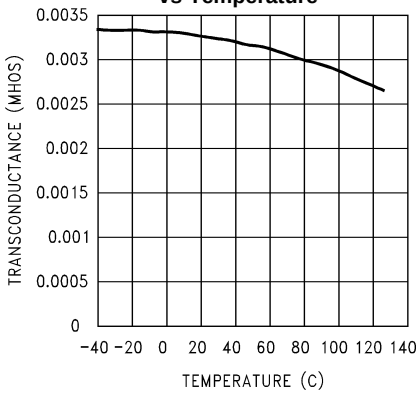

Figure 12.

Error Amp Voltage Gain vs Temperature

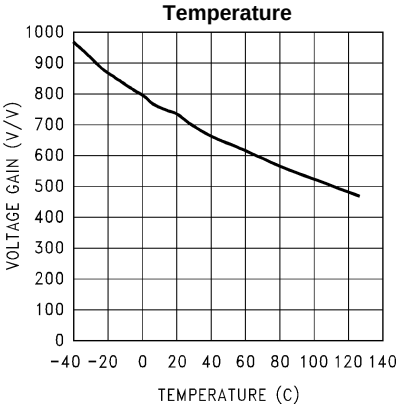

Figure 13.

Short Circuit Frequency vs Temperature

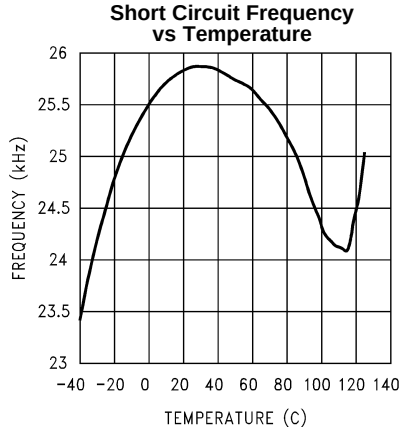

Figure 14.

Copyright © 2004–2005, Texas Instruments Incorporated

Typical Performance Characteristics (continued)

Shutdown Supply Current vs Temperature

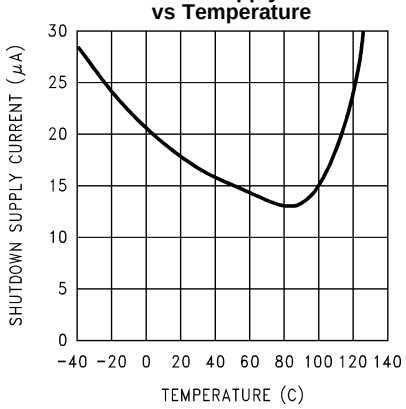

Figure 15.

$\overline{ON}$ /OFF Pin Current vs Voltage

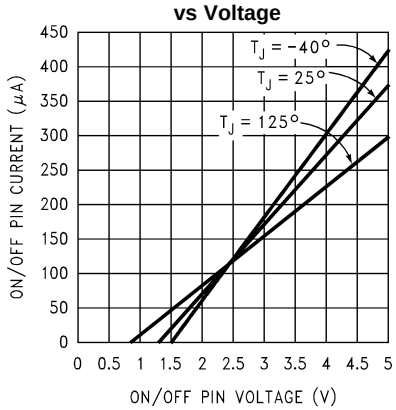

Figure 16.

Oscillator Frequency vs Resistance

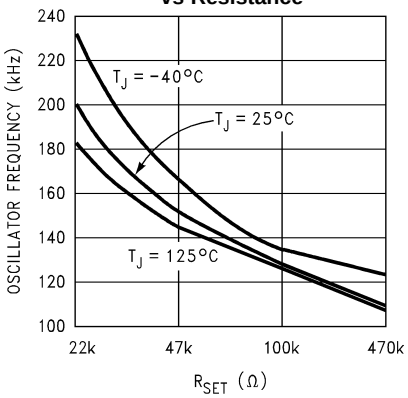

Figure 17.

Flyback Regulator

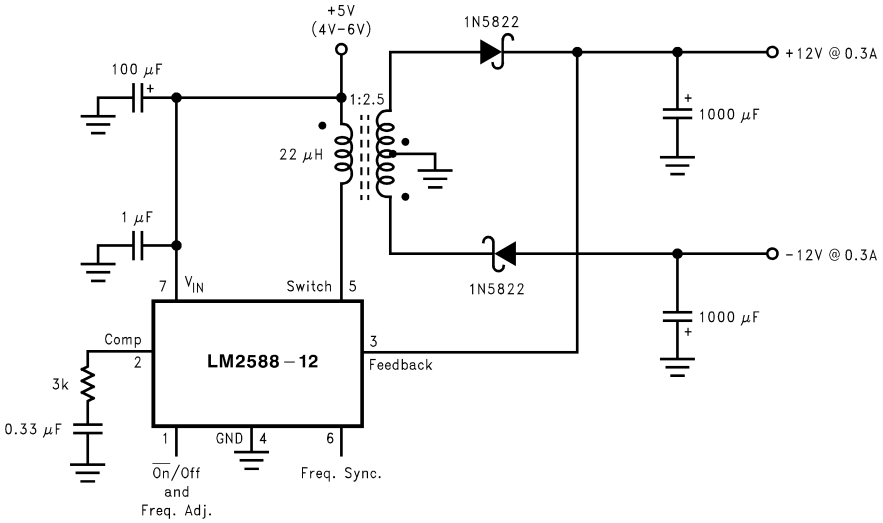

Test Circuits

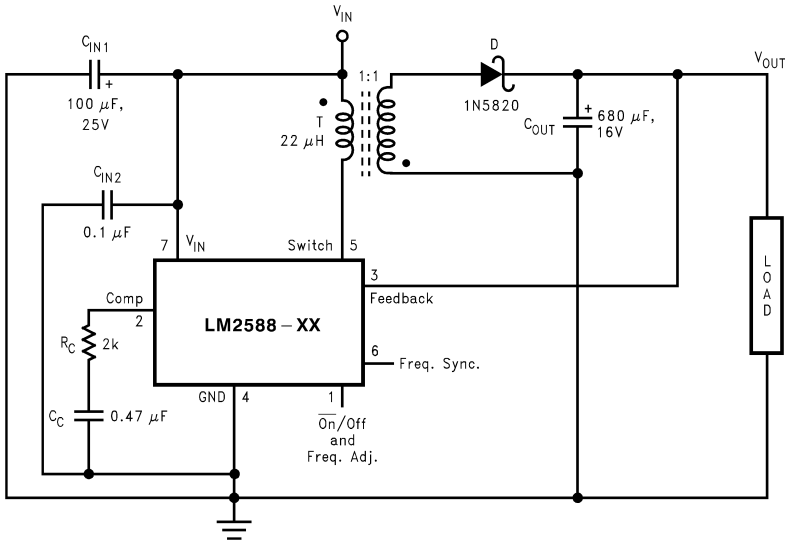

C_{IN1}—100 µF, 25V Aluminum ElectrolyticC_{IN2}—0.1 µF CeramicT—22 µH, 1:1 Schott #67141450D—1N5820C_{OUT}—680 µF, 16V Aluminum ElectrolyticC_C—0.47 µF CeramicR_C—2k

Figure 18. LM2588-3.3 and LM2588-5.0

Copyright © 2004–2005, Texas Instruments Incorporated

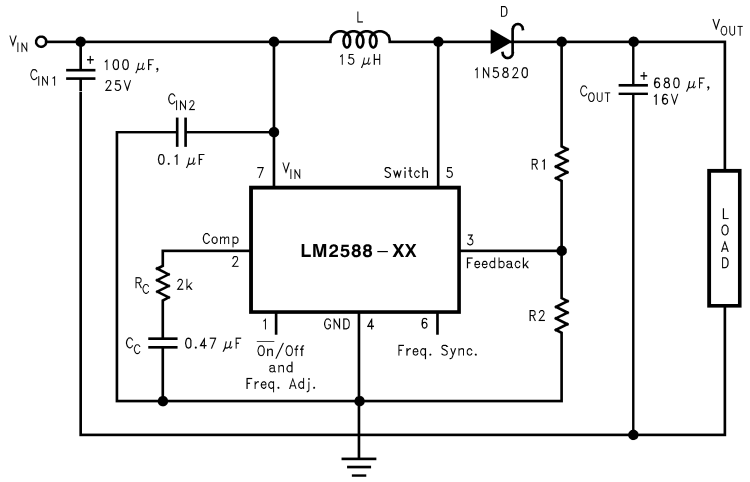

C_{IN1}—100 µF, 25V Aluminum ElectrolyticC_{IN2}—0.1 µF CeramicL—15 µH, Renco #RL-5472-5D—1N5820C_{OUT}—680 µF, 16V Aluminum ElectrolyticC_C—0.47 µF CeramicR_C—2kFor 12V Devices: R1 = Short (0Ω) andR2 = OpenFor ADJ Devices: R1 = 48.75k, ±0.1% andR2 = 5.62k, ±0.1%

Figure 19. LM2588-12 and LM2588-ADJ

Block Diagram

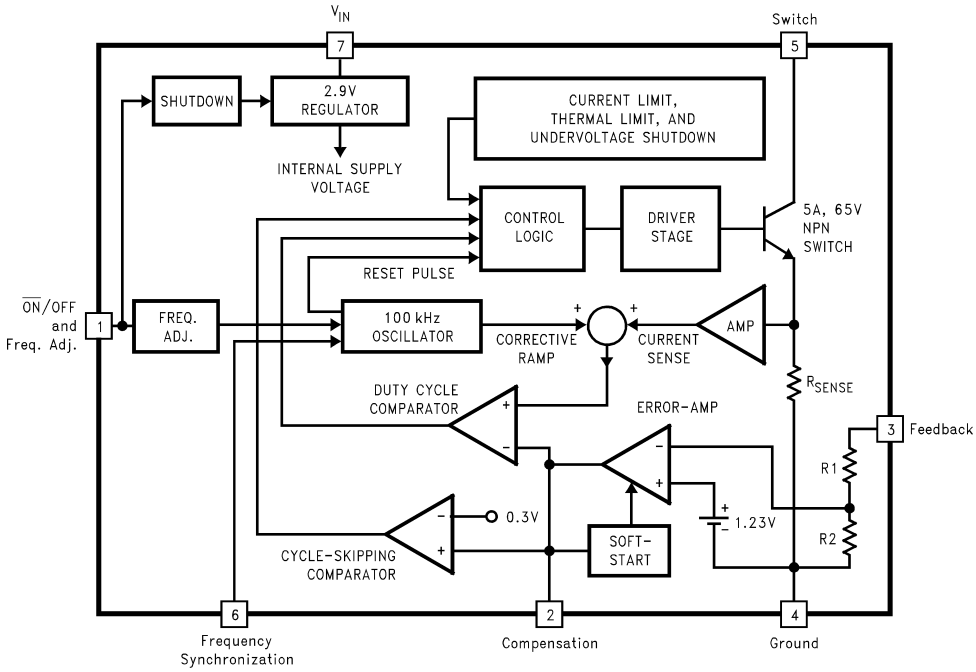

For Fixed Versions 3.3V, R1 = 3.4k, R2 = 2k5.0V, R1 = 6.15k, R2 = 2k12V, R1 = 8.73k, R2 = 1kFor Adj. VersionR1 = Short (0Ω), R2 = Open

Flyback Regulator Operation

The LM2588 is ideally suited for use in the flyback regulator topology. The flyback regulator can produce a single output voltage, such as the one shown in Figure 20, or multiple output voltages. In Figure 20, the flyback regulator generates an output voltage that is inside the range of the input voltage. This feature is unique to flyback regulators and cannot be duplicated with buck or boost regulators.

Copyright © 2004–2005, Texas Instruments Incorporated

The operation of a flyback regulator is as follows (refer to Figure 20): when the switch is on, current flows through the primary winding of the transformer, T1, storing energy in the magnetic field of the transformer. Note that the primary and secondary windings are out of phase, so no current flows through the secondary when current flows through the primary. When the switch turns off, the magnetic field collapses, reversing the voltage polarity of the primary and secondary windings. Now rectifier D1 is forward biased and current flows through it, releasing the energy stored in the transformer. This produces voltage at the output.

The output voltage is controlled by modulating the peak switch current. This is done by feeding back a portion of the output voltage to the error amp, which amplifies the difference between the feedback voltage and a 1.230V reference. The error amp output voltage is compared to a ramp voltage proportional to the switch current (i.e., inductor current during the switch on time). The comparator terminates the switch on time when the two voltages are equal, thereby controlling the peak switch current to maintain a constant output voltage.

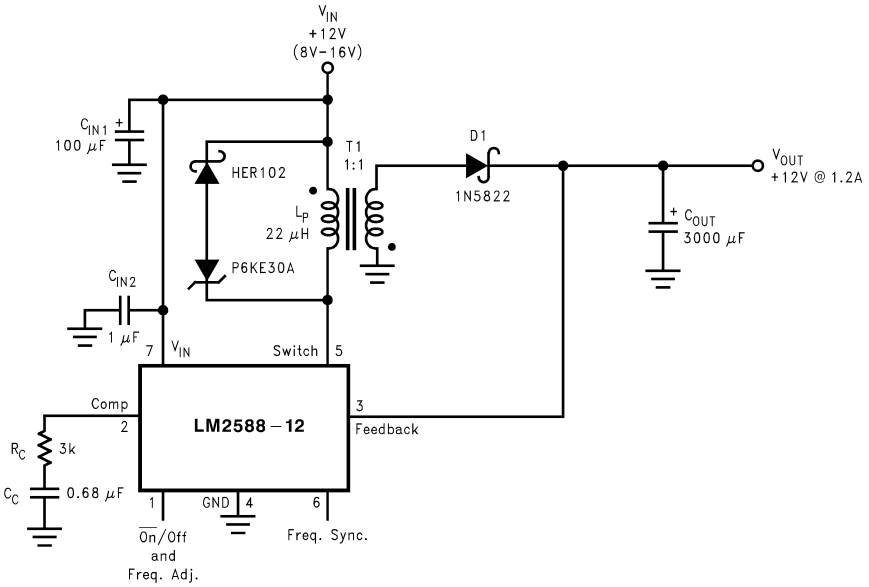

As shown in Figure 20, the LM2588 can be used as a flyback regulator by using a minimum number of external components. The switching waveforms of this regulator are shown in Figure 21. Typical Performance Characteristics observed during the operation of this circuit are shown in Figure 22.

Figure 20. 12V Flyback Regulator Design Example

Copyright © 2004–2005, Texas Instruments Incorporated

Typical Performance Characteristics

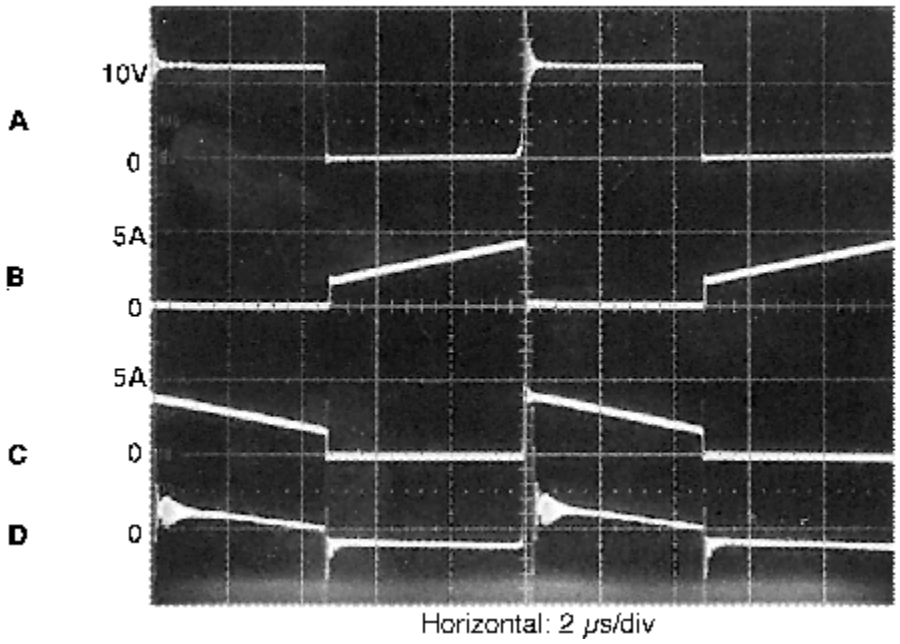

A: Switch Voltage, 10V/div
B: Switch Current, 5A/div
C: Output Rectifier Current, 5A/div
D: Output Ripple Voltage, 100 mV/div
AC-Coupled

Figure 21. Switching Waveforms

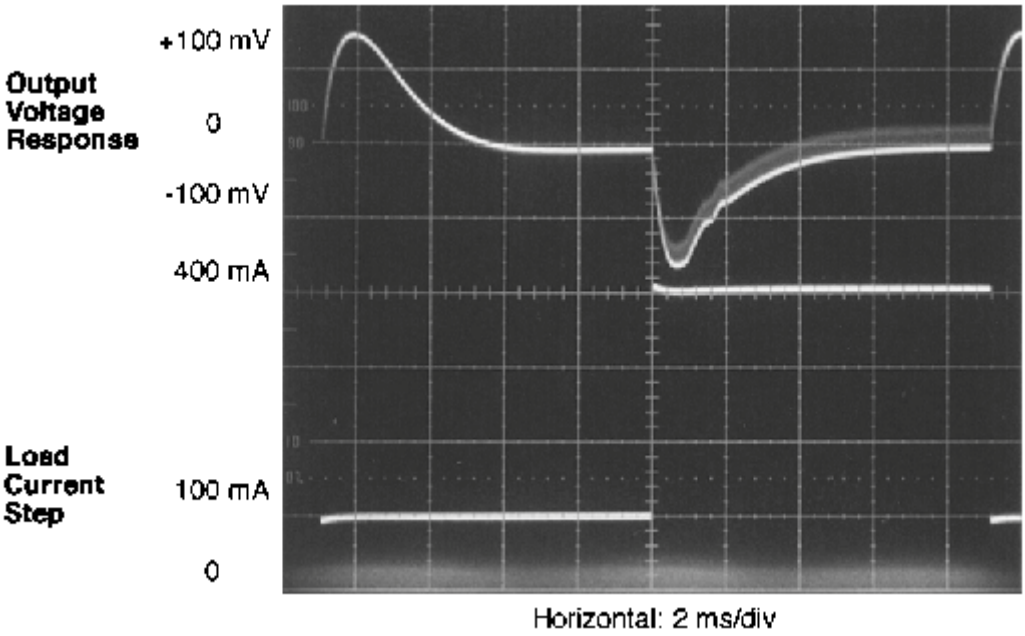

Figure 22. V_{OUT} Response to Load Current Step

Typical Flyback Regulator Applications

Figure 23 through Figure 28 show six typical flyback applications, varying from single output to triple output. Each drawing contains the part number(s) and manufacturer(s) for every component except the transformer. For the transformer part numbers and manufacturers' names, see Table 1. For applications with different output voltages—requiring the LM2588-ADJ—or different output configurations that do not match the standard configurations, refer to the *Switchers Made Simple*™ software.

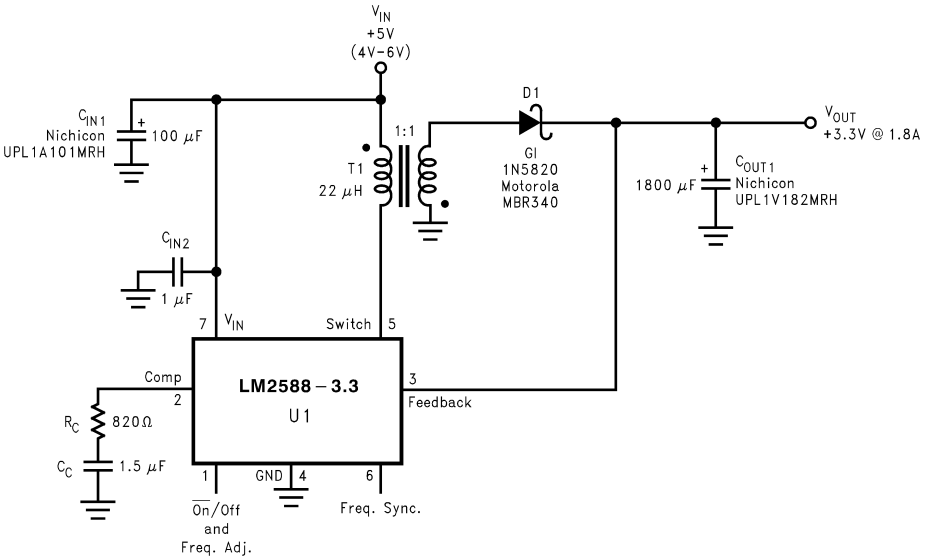

Figure 23. Single-Output Flyback Regulator

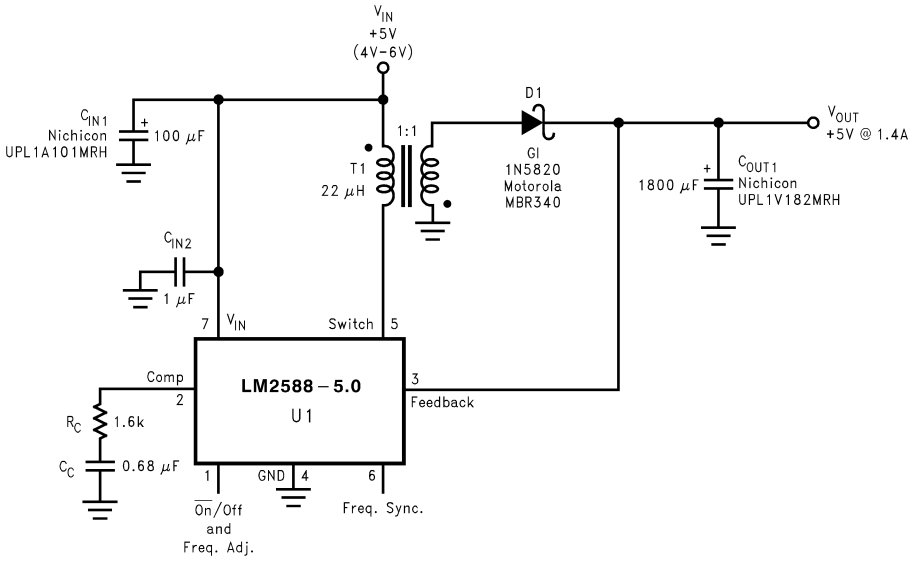

Figure 24. Single-Output Flyback Regulator

Copyright © 2004–2005, Texas Instruments Incorporated

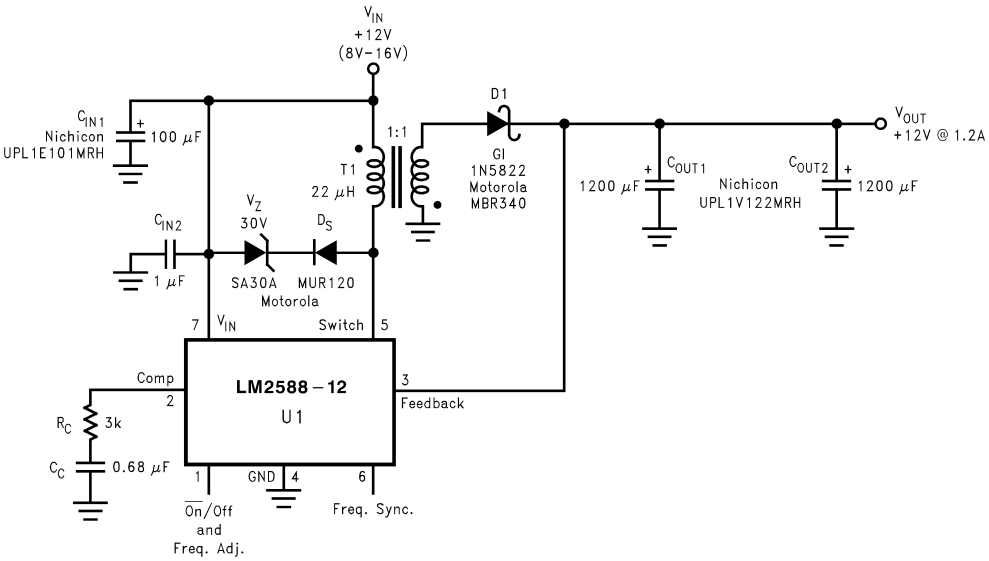

Figure 25. Single-Output Flyback Regulator

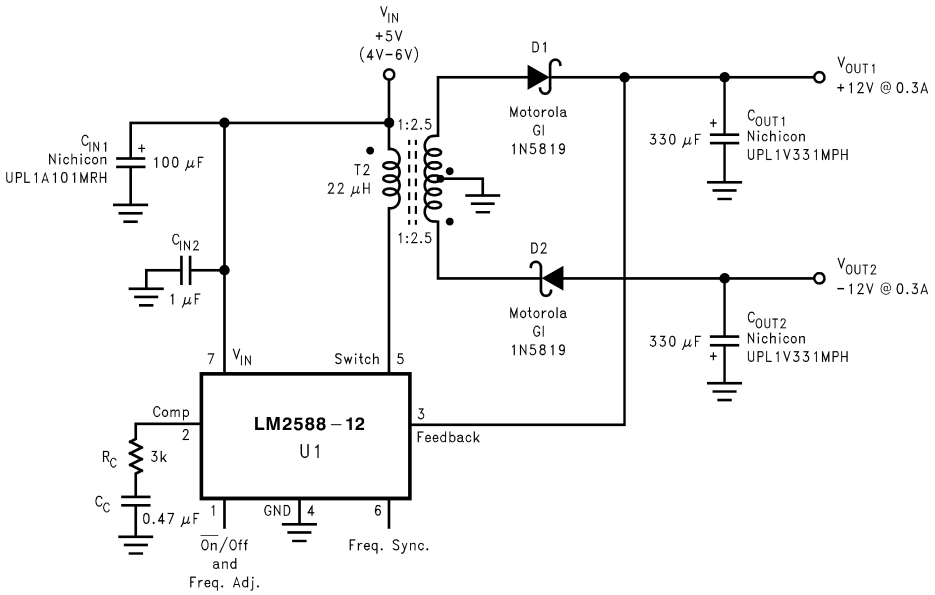

Figure 26. Dual-Output Flyback Regulator

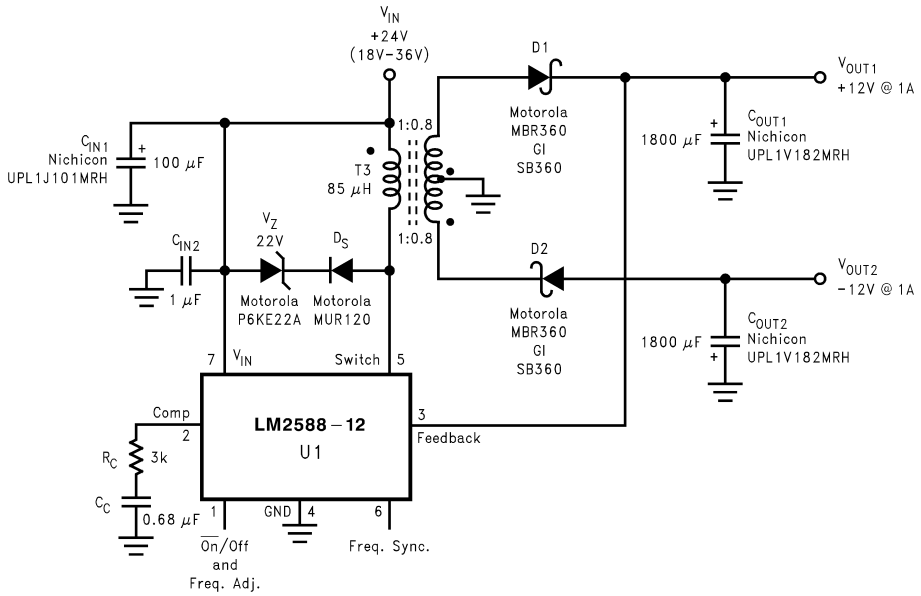

Figure 27. Dual-Output Flyback Regulator

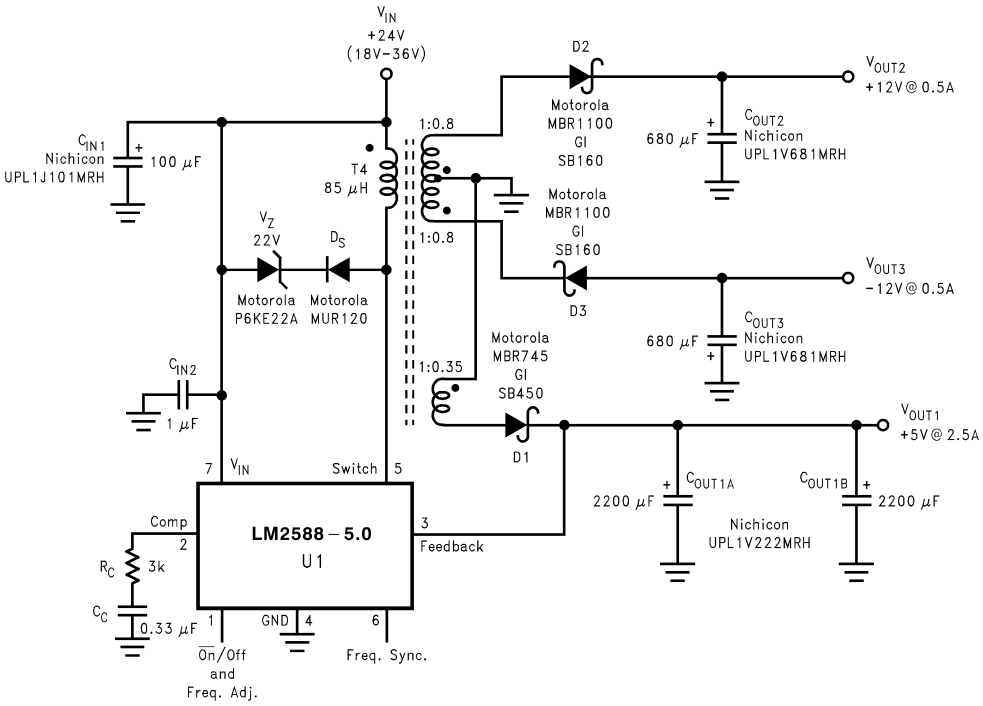

Figure 28. Triple-Output Flyback Regulator

TRANSFORMER SELECTION (T)

Table 1 lists the standard transformers available for flyback regulator applications. Included in the table are the turns ratio(s) for each transformer, as well as the output voltages, input voltage ranges, and the maximum load currents for each circuit.

Copyright © 2004–2005, Texas Instruments Incorporated

Table 1. Transformer Selection Table

Applications	Figure 23	Figure 24	Figure 25	Figure 26	Figure 27	Figure 28
Transformers	**T1**	**T1**	**T1**	**T2**	**T3**	**T4**
V_{IN}	4V–6V	4V–6V	8V–16V	4V–6V	18V–36V	18V–36V
V_{OUT1}	3.3V	5V	12V	12V	12V	5V
I_{OUT1} (Max)	1.8A	1.4A	1.2A	0.3A	1A	2.5A
N_1	1	1	1	2.5	0.8	0.35
V_{OUT2}				−12V	−12V	12V
I_{OUT2} (Max)				0.3A	1A	0.5A
N_2				2.5	0.8	0.8
V_{OUT3}						−12V
I_{OUT3} (Max)						0.5A
N_3						0.8

Table 2. Transformer Manufacturer Guide

Transformer Type	Manufacturers' Part Numbers				
	Coilcraft(1)	Coilcraft Surface Mount(1)	Pulse Surface Mount(2)	Renco(3)	Schott(4)
T1	Q4434-B	Q4435-B	PE-68411	RL-5530	67141450
T2	Q4337-B	Q4436-B	PE-68412	RL-5531	67140860
T3	Q4343-B	—	PE-68421	RL-5534	67140920
T4	Q4344-B	—	PE-68422	RL-5535	67140930

(1) Coilcraft Inc.,: Phone: (800) 322-26451102 Silver Lake Road, Cary, IL 60013: Fax: (708) 639-1469European Headquarters, 21 Napier Place: Phone: +44 1236 730 595Wardpark North, Cumbernauld, Scotland G68 0LL: Fax: +44 1236 730 627
(2) Pulse Engineering Inc.,: Phone: (619) 674-810012220 World Trade Drive, San Diego, CA 92128: Fax: (619) 674-8262European Headquarters, Dunmore Road: Phone: +353 93 24 107Tuam, Co. Galway, Ireland: Fax: +353 93 24 459
(3) Renco Electronics Inc.,: Phone: (800) 645-582860 Jeffryn Blvd. East, Deer Park, NY 11729: Fax: (516) 586-5562
(4) Schott Corp.,: Phone: (612) 475-11731000 Parkers Lane Road, Wayzata, MN 55391: Fax: (612) 475-1786

TRANSFORMER FOOTPRINTS

Figure 29 through Figure 46 show the footprints of each transformer, listed in Table 2.

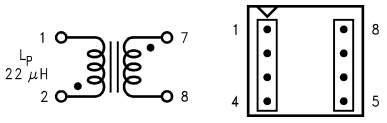

Figure 29. T1 - Top View Coilcraft Q4434-B

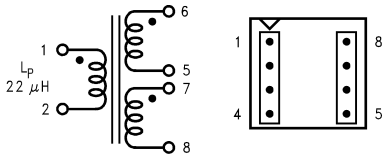

Figure 30. T2 - Top View Coilcraft Q4337-B

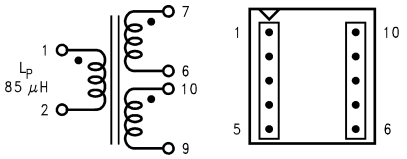

Figure 31. T3 - Top View Coilcraft Q4343-B

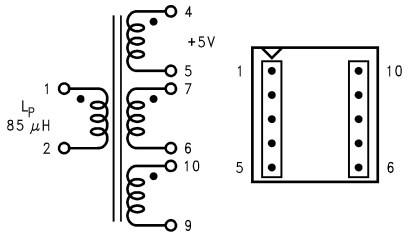

Figure 32. T4 - Top View Coilcraft Q4344-B

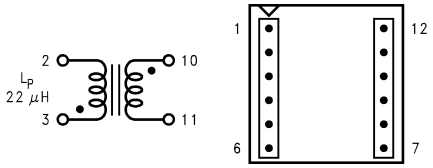

Figure 33. T1 - Top View Coilcraft Q4435-B (Surface Mount)

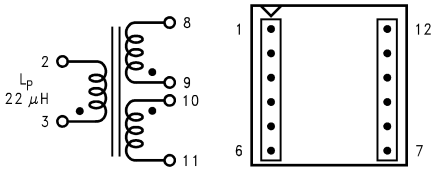

Figure 34. T2 - Top View Coilcraft Q4436-B (Surface Mount)

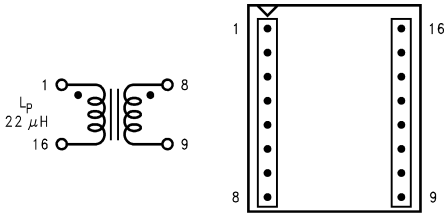

Figure 35. T1 - Top View Pulse PE-68411 (Surface Mount)

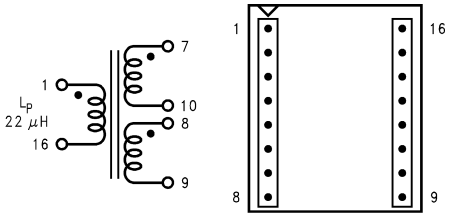

Figure 36. T2 - Top View Pulse PE-68412 (Surface Mount)

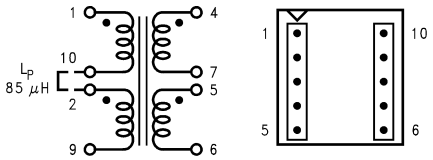

Figure 37. T3 - Top View Pulse PE-68421 (Surface Mount)

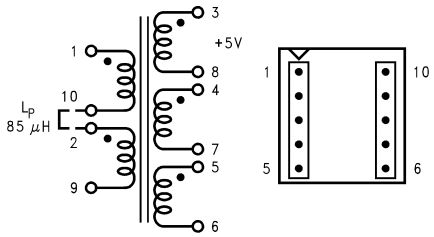

Figure 38. T4 - Top View Pulse PE-68422 (Surface Mount)

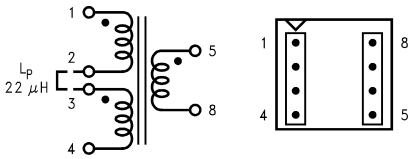

Figure 39. T1 - Top View Renco RL-5530

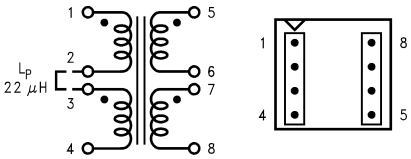

Figure 40. T2 - Top View Renco RL-5531

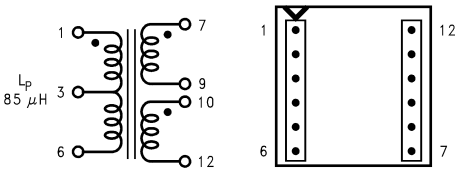

Figure 41. T3 - Top View Renco RL-5534

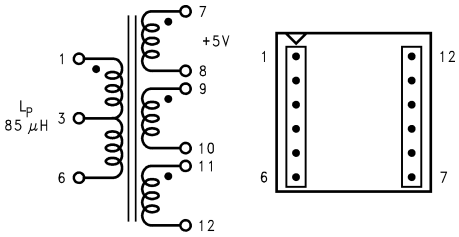

Figure 42. T4 - Top View Renco RL-5535

Copyright © 2004–2005, Texas Instruments Incorporated

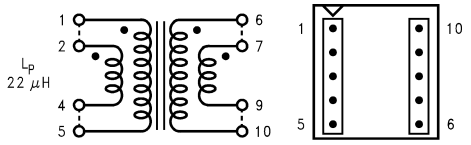

Figure 43. T1 - Top View
Schott 67141450

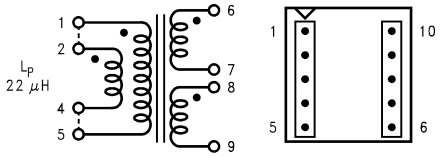

Figure 44. T2 - Top View
Schott 67140860

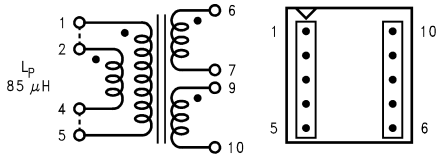

Figure 45. T3 - Top View
Schott 67140920

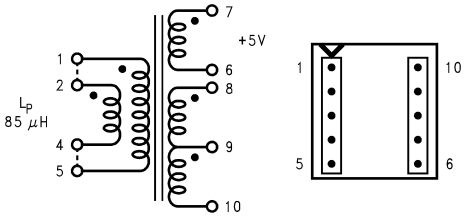

Figure 46. T4 - Top View
Schott 67140930

Step-Up (Boost) Regulator Operation

Figure 47 shows the LM2588 used as a step-up (boost) regulator. This is a switching regulator that produces an output voltage greater than the input supply voltage.

A brief explanation of how the LM2588 Boost Regulator works is as follows (refer to Figure 47). When the NPN switch turns on, the inductor current ramps up at the rate of V_{IN}/L, storing energy in the inductor. When the switch turns off, the lower end of the inductor flies above V_{IN}, discharging its current through diode (D) into the output capacitor (C_{OUT}) at a rate of $(V_{OUT} - V_{IN})/L$. Thus, energy stored in the inductor during the switch on time is transferred to the output during the switch off time. The output voltage is controlled by adjusting the peak switch current, as described in the Flyback Regulator section.

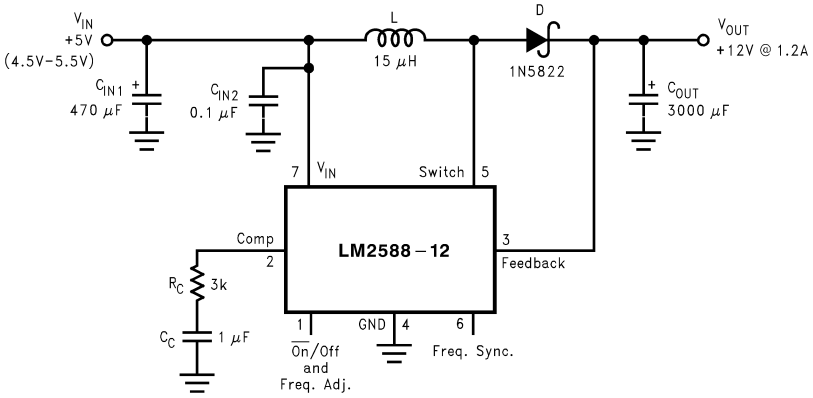

Figure 47. 12V Boost Regulator

By adding a small number of external components (as shown in Figure 47), the LM2588 can be used to produce a regulated output voltage that is greater than the applied input voltage. The switching waveforms observed during the operation of this circuit are shown in Figure 48. Typical performance of this regulator is shown in Figure 49.

Typical Performance Characteristics

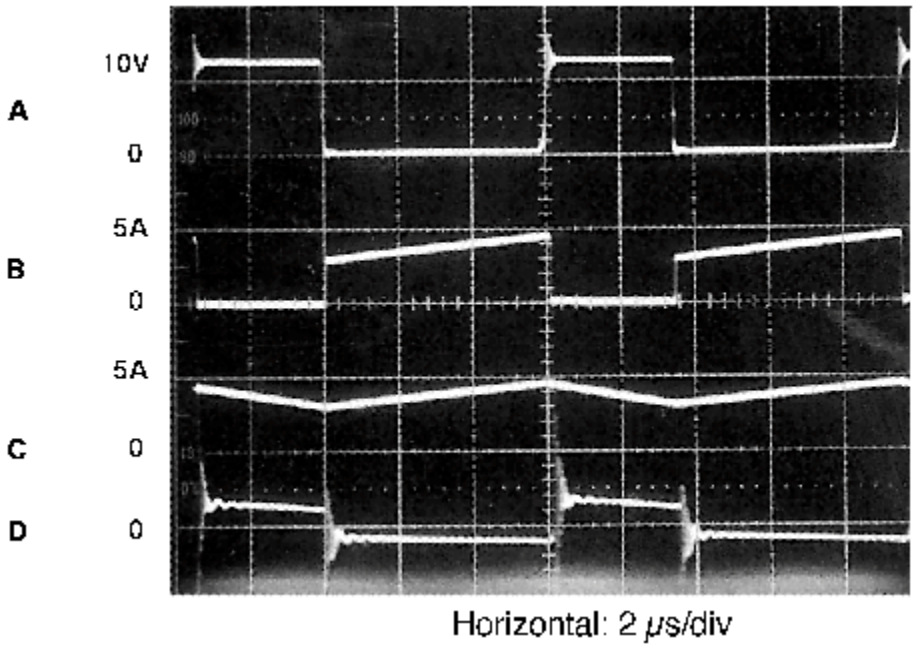

A: Switch Voltage,10V/div
B: Switch Current, 5A/div
C: Inductor Current, 5A/div
D: Output Ripple Voltage,
100 mV/div, AC-Coupled

Figure 48. Switching Waveforms

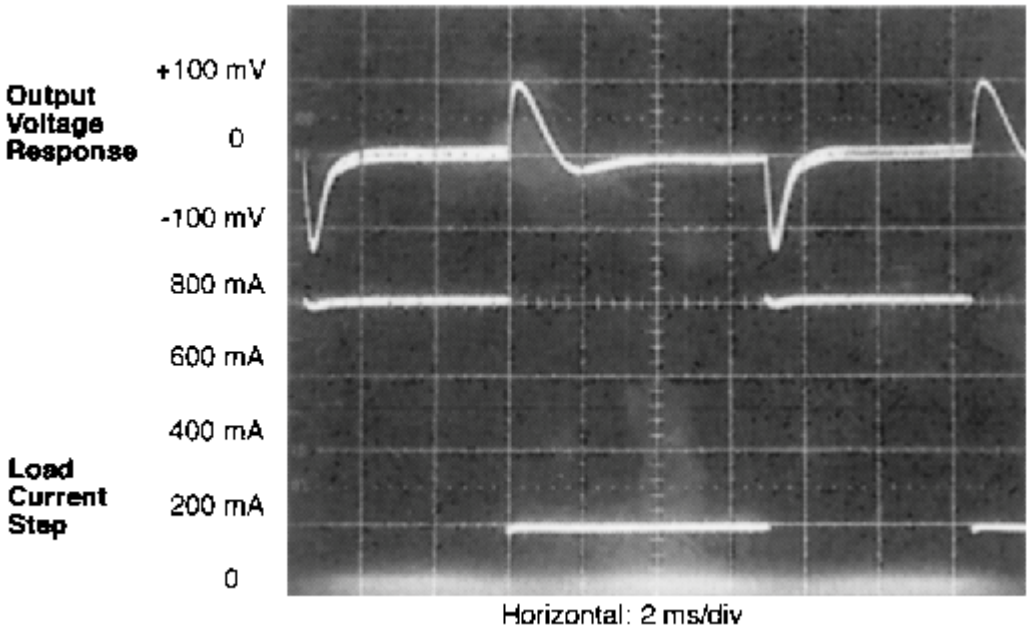

Figure 49. V_{OUT} Response to Load Current Step

Copyright © 2004–2005, Texas Instruments Incorporated

TYPICAL BOOST REGULATOR APPLICATIONS

Figure 50 and Figure 51 through Figure 53 show four typical boost applications—one fixed and three using the adjustable version of the LM2588. Each drawing contains the part number(s) and manufacturer(s) for every component. For the fixed 12V output application, the part numbers and manufacturers' names for the inductor are listed in a table in Table 3. For applications with different output voltages, refer to the *Switchers Made Simple™software.*

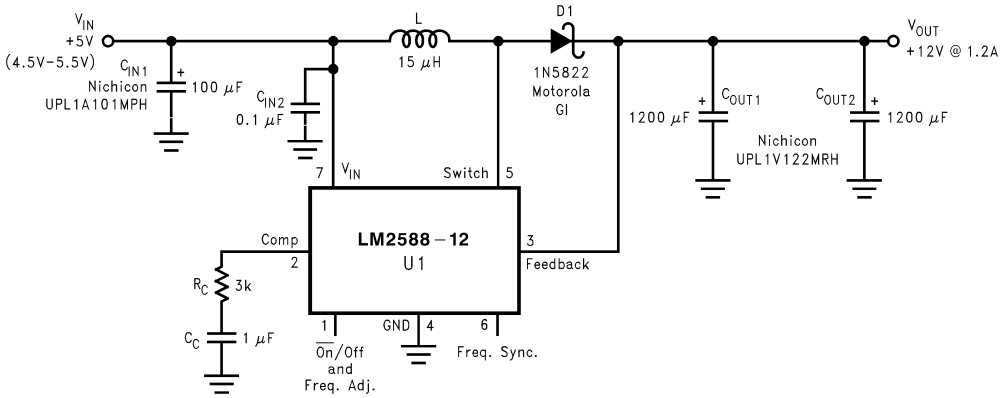

Figure 50. +5V to +12V Boost Regulator

Table 3 contains a table of standard inductors, by part number and corresponding manufacturer, for the fixed output regulator of Figure 50.

Table 3. Inductor Selection Table

Coilcraft (1)	Pulse (2)	Renco (3)	Schott (4)
R4793-A	PE-53900	RL-5472-5	67146520

(1) Coilcraft Inc.,: Phone: (800) 322-26451102 Silver Lake Road, Cary, IL 60013: Fax: (708) 639-1469European Headquarters, 21 Napier Place: Phone: +44 1236 730 595Wardpark North, Cumbernauld, Scotland G68 0LL: Fax: +44 1236 730 627
(2) Pulse Engineering Inc.,: Phone: (619) 674-810012220 World Trade Drive, San Diego, CA 92128: Fax: (619) 674-8262European Headquarters, Dunmore Road: Phone: +353 93 24 107Tuam, Co. Galway, Ireland: Fax: +353 93 24 459
(3) Renco Electronics Inc.,: Phone: (800) 645-582860 Jeffryn Blvd. East, Deer Park, NY 11729: Fax: (516) 586-5562
(4) Schott Corp.,: Phone: (612) 475-11731000 Parkers Lane Road, Wayzata, MN 55391: Fax: (612) 475-1786

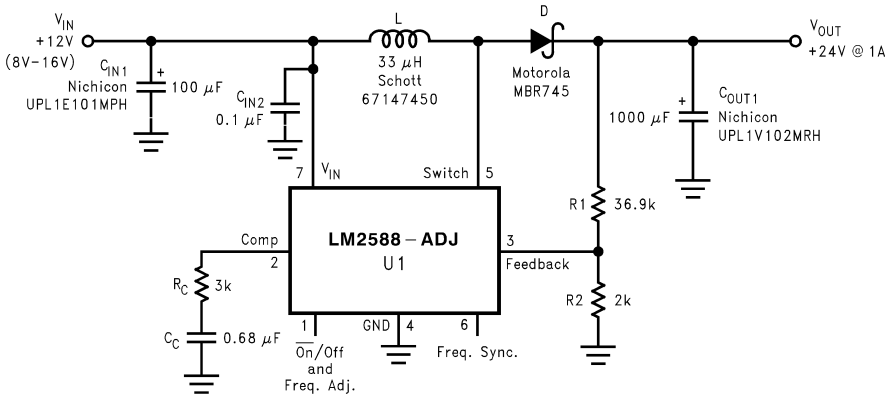

Figure 51. +12V to +24V Boost Regulator

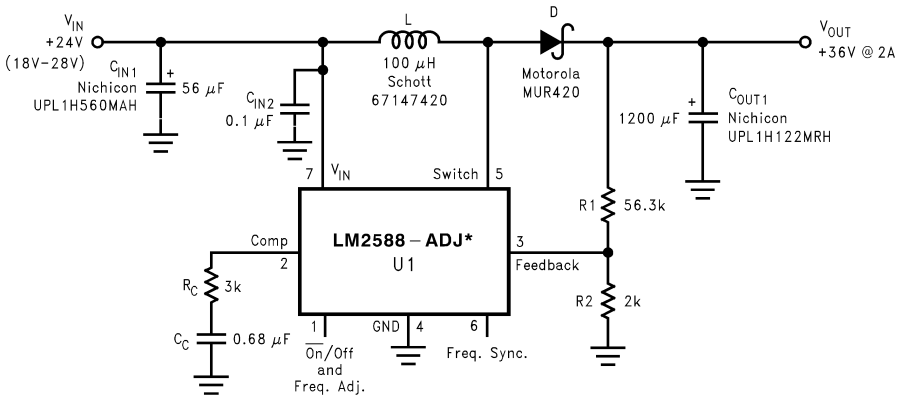

Figure 52. +24V to +36V Boost Regulator

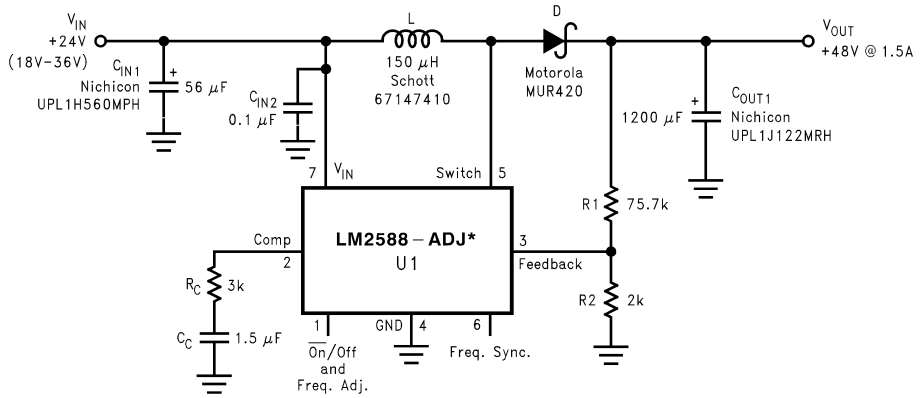

*The LM2588 will require a heat sink in these applications. The size of the heat sink will depend on the maximum ambient temperature. To calculate the thermal resistance of the IC and the size of the heat sink needed, see the HEAT SINK/THERMAL CONSIDERATIONS section in the Application Hints.

Figure 53. +24V to +48V Boost Regulator

Application Hints

LM2588 SPECIAL FEATURES

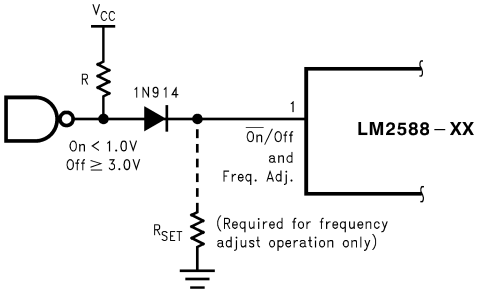

Figure 54. Shutdown Operation

SHUTDOWN CONTROL

A feature of the LM2588 is its ability to be shut down using the $\overline{\text{ON}}$ /OFF pin (pin 1). This feature conserves input power by turning off the device when it is not in use. For proper operation, an isolation diode is required (as shown in Figure 54).

Copyright © 2004–2005, Texas Instruments Incorporated

The device will shut down when 3V or greater is applied on the $\overline{ON}$ /OFF pin, sourcing current into pin 1. In shut down mode, the device will draw typically 56 µA of supply current (16 µA to V_{IN} and 40 µA to the $\overline{ON}$ /OFF pin). To turn the device back on, leave pin 1 floating, using an (isolation) diode, as shown in Figure 54 (for normal operation, do not source or sink current to or from this pin—see the next section).

FREQUENCY ADJUSTMENT

The switching frequency of the LM2588 can be adjusted with the use of an external resistor. This feature allows the user to optimize the size of the magnetics and the output capacitor(s) by tailoring the operating frequency. A resistor connected from pin 1 (the Freq. Adj. pin) to ground will set the switching frequency from 100 kHz to 200 kHz (maximum). As shown in Figure 54, the pin can be used to adjust the frequency while still providing the shut down function. A curve in the Performance Characteristics Section graphs the resistor value to the corresponding switching frequency. The table in Table 4 shows resistor values corresponding to commonly used frequencies.

However, changing the LM2588's operating frequency from its nominal value of 100 kHz will change the magnetics selection and compensation component values.

Table 4. Frequency Setting Resistor Guide

R_{SET}(kΩ)	Frequency (kHz)
Open	100
200	125
47	150
33	175
22	200

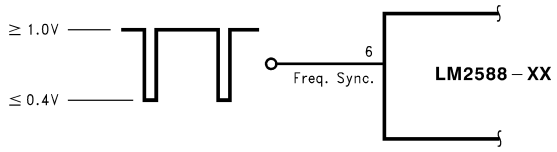

Figure 55. Frequency Synchronization

FREQUENCY SYNCHRONIZATION

Another feature of the LM2588 is the ability to synchronize the switching frequency to an external source, using the sync pin (pin 6). This feature allows the user to parallel multiple devices to deliver more output power.

A negative falling pulse applied to the sync pin will synchronize the LM2588 to an external oscillator (see Figure 55 and Figure 56).

Use of this feature enables the LM2588 to be synchronized to an external oscillator, such as a system clock. This operation allows multiple power supplies to operate at the same frequency, thus eliminating frequency-related noise problems.

Copyright © 2004–2005, Texas Instruments Incorporated

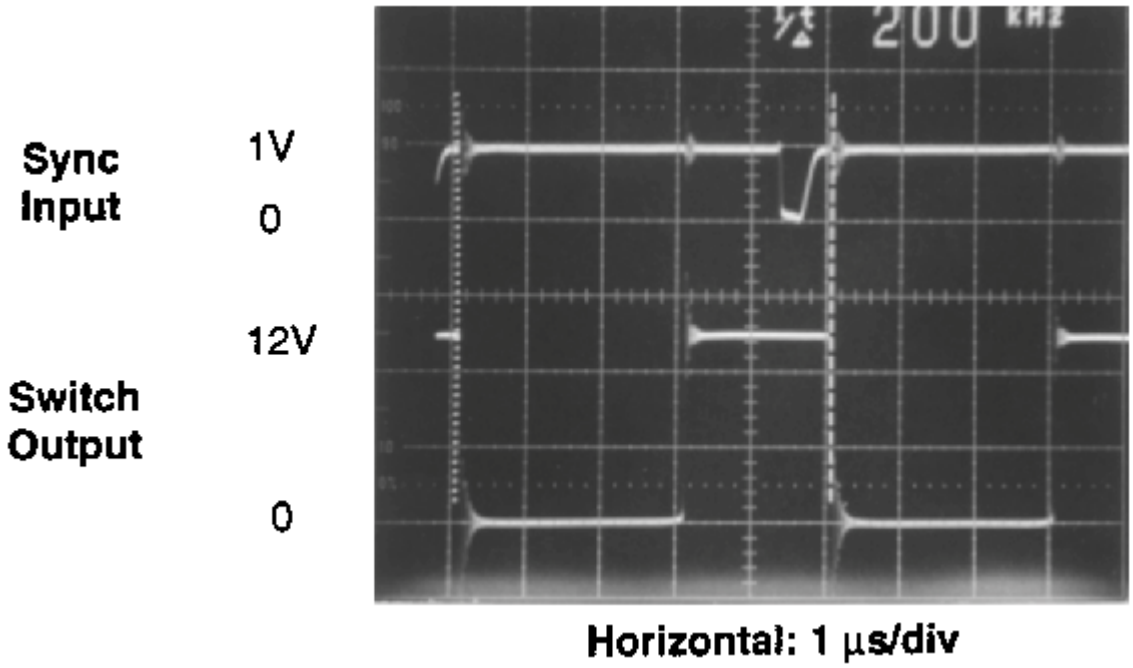

Figure 56. Waveforms of a Synchronized 12V Boost Regulator

The scope photo in Figure 56 shows a LM2588 12V Boost Regulator synchronized to a 200 kHz signal. There is a 700 ns delay between the falling edge of the sync signal and the turning on of the switch.

PROGRAMMING OUTPUT VOLTAGE (SELECTING R1 AND R2)

Referring to the adjustable regulator in Figure 57, the output voltage is programmed by the resistors R1 and R2 by the following formula:

$$V_{OUT} = V_{REF} (1 + R1/R2) \qquad \text{where } V_{REF} = 1.23V \tag{1}$$

Resistors R1 and R2 divide the output voltage down so that it can be compared with the 1.23V internal reference. With R2 between 1k and 5k, R1 is:

$$R1 = R2 (V_{OUT}/V_{REF} - 1) \qquad \text{where } V_{REF} = 1.23V \tag{2}$$

For best temperature coefficient and stability with time, use 1% metal film resistors.

SHORT CIRCUIT CONDITION

Due to the inherent nature of boost regulators, when the output is shorted (see Figure 57), current flows directly from the input, through the inductor and the diode, to the output, bypassing the switch. The current limit of the switch *does not* limit the output current for the entire circuit. To protect the load and prevent damage to the switch, the current must be externally limited, either by the input supply or at the output with an external current limit circuit. The external limit should be set to the maximum switch current of the device, which is 5A.

In a flyback regulator application (Figure 58), using the standard transformers, the LM2588 will survive a short circuit to the main output. When the output voltage drops to 80% of its nominal value, the frequency will drop to 25 kHz. With a lower frequency, off times are larger. With the longer off times, the transformer can release all of its stored energy before the switch turns back on. Hence, the switch turns on initially with zero current at its collector. In this condition, the switch current limit will limit the peak current, saving the device.

 Copyright © 2004–2005, Texas Instruments Incorporated

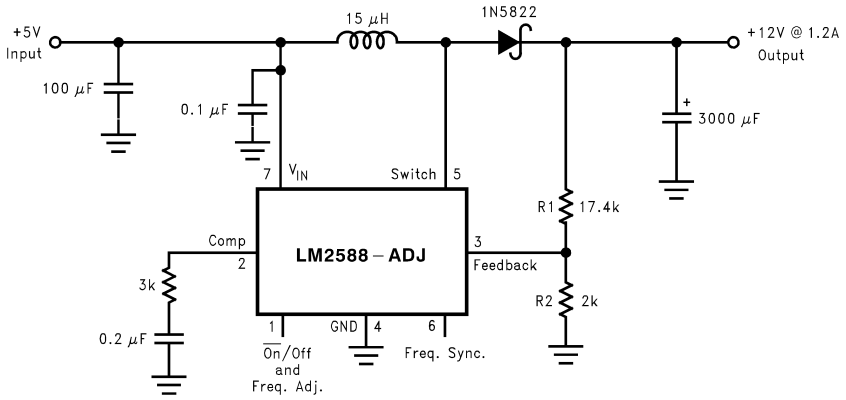

Figure 57. Boost Regulator

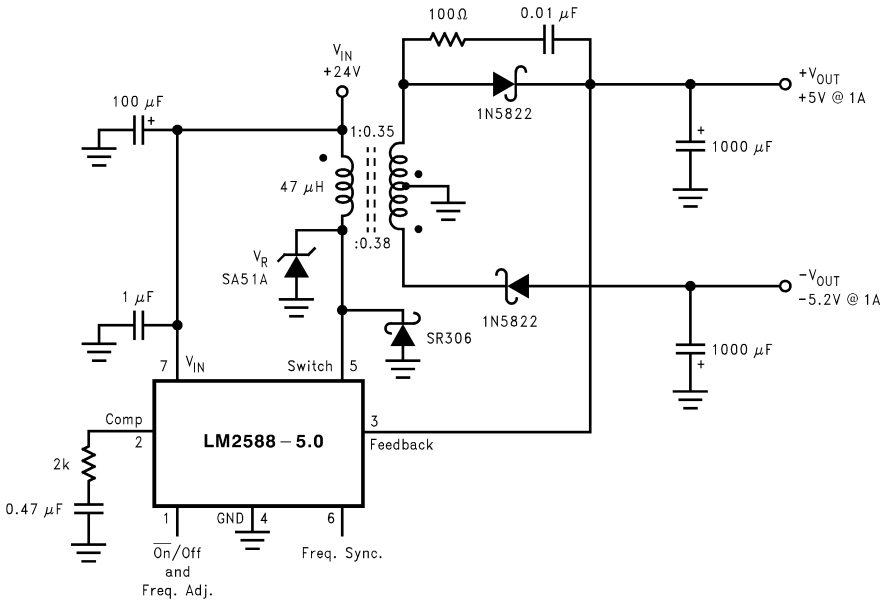

Figure 58. Flyback Regulator

FLYBACK REGULATOR INPUT CAPACITORS

A flyback regulator draws discontinuous pulses of current from the input supply. Therefore, there are two input capacitors needed in a flyback regulator—one for energy storage and one for filtering (see Figure 58). Both are required due to the inherent operation of a flyback regulator. To keep a stable or constant voltage supply to the LM2588, a storage capacitor (≥100 µF) is required. If the input source is a recitified DC supply and/or the application has a wide temperature range, the required rms current rating of the capacitor might be very large. This means a larger value of capacitance or a higher voltage rating will be needed for the input capacitor. The storage capacitor will also attenuate noise which may interfere with other circuits connected to the same input supply voltage.

In addition, a small bypass capacitor is required due to the noise generated by the input current pulses. To eliminate the noise, insert a 1.0 µF ceramic capacitor between V_{IN} and ground as close as possible to the device.

SWITCH VOLTAGE LIMITS

In a flyback regulator, the maximum steady-state voltage appearing at the switch, when it is off, is set by the transformer turns ratio, N, the output voltage, V_{OUT}, and the maximum input voltage, V_{IN} (Max):

$$V_{SW(OFF)} = V_{IN}\ (Max) + (V_{OUT} + V_F)/N \quad (3)$$

where V_F is the forward biased voltage of the output diode, and is typically 0.5V for Schottky diodes and 0.8V for ultra-fast recovery diodes. In certain circuits, there exists a voltage spike, V_{LL}, superimposed on top of the steady-state voltage (see Figure 21, waveform A). Usually, this voltage spike is caused by the transformer leakage inductance and/or the output rectifier recovery time. To "clamp" the voltage at the switch from exceeding its maximum value, a transient suppressor in series with a diode is inserted across the transformer primary (as shown in the circuit in Figure 20 and other flyback regulator circuits throughout the datasheet). The schematic in Figure 58 shows another method of clamping the switch voltage. A single voltage transient suppressor (the SA51A) is inserted at the switch pin. This method clamps the total voltage across the switch, not just the voltage across the primary.

If poor circuit layout techniques are used (see the CIRCUIT LAYOUT GUIDELINES section), negative voltage transients may appear on the Switch pin (pin 5). Applying a negative voltage (with respect to the IC's ground) to any monolithic IC pin causes erratic and unpredictable operation of that IC. This holds true for the LM2588 IC as well. When used in a flyback regulator, the voltage at the Switch pin (pin 5) can go negative when the switch turns on. The "ringing" voltage at the switch pin is caused by the output diode capacitance and the transformer leakage inductance forming a resonant circuit at the secondary(ies). The resonant circuit generates the "ringing" voltage, which gets reflected back through the transformer to the switch pin. There are two common methods to avoid this problem. One is to add an RC snubber around the output rectifier(s), as in Figure 58. The values of the resistor and the capacitor must be chosen so that the voltage at the Switch pin does not drop below −0.4V. The resistor may range in value between 10Ω and 1 kΩ, and the capacitor will vary from 0.001 μF to 0.1 μF. Adding a snubber will (slightly) reduce the efficiency of the overall circuit.

The other method to reduce or eliminate the "ringing" is to insert a Schottky diode clamp between pins 5 and 4 (ground), also shown in Figure 58. This prevents the voltage at pin 5 from dropping below −0.4V. The reverse voltage rating of the diode must be greater than the switch off voltage.

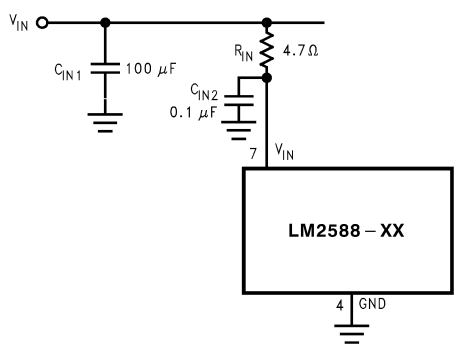

Figure 59. Input Line Filter

OUTPUT VOLTAGE LIMITATIONS

The maximum output voltage of a boost regulator is the maximum switch voltage minus a diode drop. In a flyback regulator, the maximum output voltage is determined by the turns ratio, N, and the duty cycle, D, by the equation:

$$V_{OUT} \approx N \times V_{IN} \times D/(1 - D) \quad (4)$$

The duty cycle of a flyback regulator is determined by the following equation:

$$D = \frac{V_{OUT} + V_F}{N(V_{IN} - V_{SAT}) + V_{OUT} + V_F} \approx \frac{V_{OUT}}{N(V_{IN}) + V_{OUT}} \quad (5)$$

Theoretically, the maximum output voltage can be as large as desired—just keep increasing the turns ratio of the transformer. However, there exists some physical limitations that prevent the turns ratio, and thus the output voltage, from increasing to infinity. The physical limitations are capacitances and inductances in the LM2588 switch, the output diode(s), and the transformer—such as reverse recovery time of the output diode (mentioned above).

Copyright © 2004–2005, Texas Instruments Incorporated

NOISY INPUT LINE CONDITION

A small, low-pass RC filter should be used at the input pin of the LM2588 if the input voltage has an unusually large amount of transient noise, such as with an input switch that bounces. The circuit in Figure 59 demonstrates the layout of the filter, with the capacitor placed from the input pin to ground and the resistor placed between the input supply and the input pin. Note that the values of R_{IN} and C_{IN} shown in the schematic are good enough for most applications, but some readjusting might be required for a particular application. If efficiency is a major concern, replace the resistor with a small inductor (say 10 µH and rated at 200 mA).

STABILITY

All current-mode controlled regulators can suffer from an instability, known as subharmonic oscillation, if they operate with a duty cycle above 50%. To eliminate subharmonic oscillations, a minimum value of inductance is required to ensure stability for all boost and flyback regulators. The minimum inductance is given by:

$$L(Min) = \frac{2.92\,[(V_{IN}(Min) - V_{SAT}) \bullet (2D(Max) - 1)]}{1 - D(Max)}\,(\mu H) \tag{6}$$

where V_{SAT} is the switch saturation voltage and can be found in the Characteristic Curves.

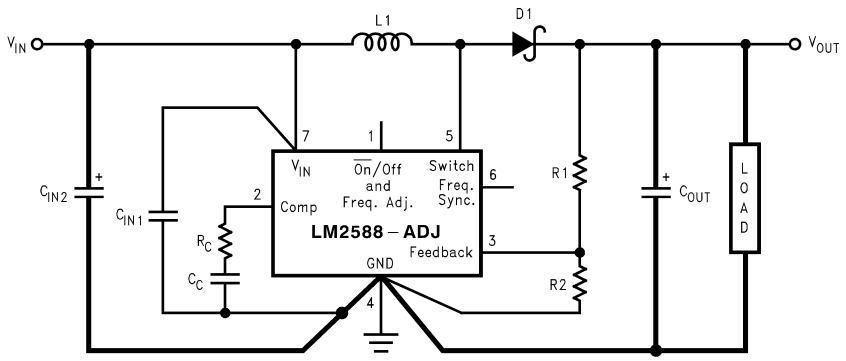

Figure 60. Circuit Board Layout

CIRCUIT LAYOUT GUIDELINES

As in any switching regulator, layout is very important. Rapidly switching currents associated with wiring inductance generate voltage transients which can cause problems. For minimal inductance and ground loops, keep the length of the leads and traces as short as possible. Use single point grounding or ground plane construction for best results. Separate the signal grounds from the power grounds (as indicated in Figure 60). When using the Adjustable version, physically locate the programming resistors as near the regulator IC as possible, to keep the sensitive feedback wiring short.

HEAT SINK/THERMAL CONSIDERATIONS

In many cases, a heat sink is not required to keep the LM2588 junction temperature within the allowed operating temperature range. For each application, to determine whether or not a heat sink will be required, the following must be identified:

1) Maximum ambient temperature (in the application).

2) Maximum regulator power dissipation (in the application).

3) Maximum allowed junction temperature (125°C for the LM2588). For a safe, conservative design, a temperature approximately 15°C cooler than the maximum junction temperature should be selected (110°C).

4) LM2588 package thermal resistances θ_{JA} and θ_{JC} (given in the Electrical Characteristics).

Total power dissipated (P_D) by the LM2588 can be estimated as follows:

Boost:

Copyright © 2004–2005, Texas Instruments Incorporated

$$P_D = 0.15\Omega \bullet \left(\frac{I_{LOAD}}{1-D}\right)^2 \bullet D + \frac{I_{LOAD}}{50\bullet(1-D)} \bullet D \bullet V_{IN}$$

Flyback:

$$P_D = 0.15\Omega \bullet \left(\frac{N \bullet \Sigma I_{LOAD}}{1-D}\right)^2 \bullet D + \frac{N\bullet\Sigma I_{LOAD}}{50\bullet(1-D)} \bullet D \bullet V_{IN} \quad (7)$$

V_{IN} is the minimum input voltage, V_{OUT} is the output voltage, N is the transformer turns ratio, D is the duty cycle, and I_{LOAD} is the maximum load current (and $\sum I_{LOAD}$ is the sum of the maximum load currents for multiple-output flyback regulators). The duty cycle is given by:

Boost:

$$D = \frac{V_{OUT} + V_F - V_{IN}}{V_{OUT} + V_F - V_{SAT}} \approx \frac{V_{OUT} - V_{IN}}{V_{OUT}}$$

Flyback:

$$D = \frac{V_{OUT} + V_F}{N(V_{IN} - V_{SAT}) + V_{OUT} + V_F} \approx \frac{V_{OUT}}{N(V_{IN}) + V_{OUT}} \quad (8)$$

where V_F is the forward biased voltage of the diode and is typically 0.5V for Schottky diodes and 0.8V for fast recovery diodes. V_{SAT} is the switch saturation voltage and can be found in the Characteristic Curves.

When no heat sink is used, the junction temperature rise is:

$$\Delta T_J = P_D \bullet \theta_{JA}. \quad (9)$$

Adding the junction temperature rise to the maximum ambient temperature gives the actual operating junction temperature:

$$T_J = \Delta T_J + T_A. \quad (10)$$

If the operating junction temperature exceeds the maximum junction temperatue in item 3 above, then a heat sink is required. When using a heat sink, the junction temperature rise can be determined by the following:

$$\Delta T_J = P_D \bullet (\theta_{JC} + \theta_{Interface} + \theta_{Heat\ Sink}) \quad (11)$$

Again, the operating junction temperature will be:

$$T_J = \Delta T_J + T_A \quad (12)$$

As before, if the maximum junction temperature is exceeded, a larger heat sink is required (one that has a lower thermal resistance).

Included in the *Switchers Made Simple*™ design software is a more precise (non-linear) thermal model that can be used to determine junction temperature with different input-output parameters or different component values. It can also calculate the heat sink thermal resistance required to maintain the regulator junction temperature below the maximum operating temperature.

To further simplify the flyback regulator design procedure, Texas Instruments is making available computer design software Switchers Made Simple™. Software is available on a (3½") diskette for IBM compatible computers from a Texas Instruments sales office in your area or the Texas Instruments Customer Response Center (1-800-272-9959).

Copyright © 2004–2005, Texas Instruments Incorporated

PACKAGING INFORMATION

Orderable Device	Status (1)	Package Type	Package Drawing	Pins	Package Qty	Eco Plan (2)	Lead/Ball Finish	MSL Peak Temp (3)	Op Temp (°C)	Top-Side Markings (4)	Samples
LM2588S-12	ACTIVE	DDPAK	KTW	7	45	TBD	Call TI	Call TI	-40 to 125	LM2588S -12 P+	Samples
LM2588S-12/NOPB	ACTIVE	DDPAK	KTW	7	45	Pb-Free (RoHS Exempt)	CU SN	Level-3-245C-168 HR	-40 to 125	LM2588S -12 P+	Samples
LM2588S-3.3	ACTIVE	DDPAK	KTW	7	45	TBD	Call TI	Call TI	-40 to 125	LM2588S -3.3 P+	Samples
LM2588S-3.3/NOPB	ACTIVE	DDPAK	KTW	7	45	Pb-Free (RoHS Exempt)	CU SN	Level-3-245C-168 HR	-40 to 125	LM2588S -3.3 P+	Samples
LM2588S-5.0	ACTIVE	DDPAK	KTW	7	45	TBD	Call TI	Call TI	-40 to 125	LM2588S -5.0 P+	Samples
LM2588S-5.0/NOPB	ACTIVE	DDPAK	KTW	7	45	Pb-Free (RoHS Exempt)	CU SN	Level-3-245C-168 HR	-40 to 125	LM2588S -5.0 P+	Samples
LM2588S-ADJ	ACTIVE	DDPAK	KTW	7	45	TBD	Call TI	Call TI	-40 to 125	LM2588S -ADJ P+	Samples
LM2588S-ADJ/NOPB	ACTIVE	DDPAK	KTW	7	45	Pb-Free (RoHS Exempt)	CU SN	Level-3-245C-168 HR	-40 to 125	LM2588S -ADJ P+	Samples
LM2588SX-12	ACTIVE	DDPAK	KTW	7	500	TBD	Call TI	Call TI	-40 to 125	LM2588S -12 P+	Samples
LM2588SX-12/NOPB	ACTIVE	DDPAK	KTW	7	500	Pb-Free (RoHS Exempt)	CU SN	Level-3-245C-168 HR	-40 to 125	LM2588S -12 P+	Samples
LM2588SX-3.3	ACTIVE	DDPAK	KTW	7	500	TBD	Call TI	Call TI	-40 to 125	LM2588S -3.3 P+	Samples
LM2588SX-3.3/NOPB	ACTIVE	DDPAK	KTW	7	500	Pb-Free (RoHS Exempt)	CU SN	Level-3-245C-168 HR	-40 to 125	LM2588S -3.3 P+	Samples
LM2588SX-5.0	ACTIVE	DDPAK	KTW	7	500	TBD	Call TI	Call TI	-40 to 125	LM2588S -5.0 P+	Samples
LM2588SX-5.0/NOPB	ACTIVE	DDPAK	KTW	7	500	Pb-Free (RoHS Exempt)	CU SN	Level-3-245C-168 HR	-40 to 125	LM2588S -5.0 P+	Samples
LM2588SX-ADJ	ACTIVE	DDPAK	KTW	7	500	TBD	Call TI	Call TI	-40 to 125	LM2588S -ADJ P+	Samples
LM2588SX-ADJ/NOPB	ACTIVE	DDPAK	KTW	7	500	Pb-Free (RoHS Exempt)	CU SN	Level-3-245C-168 HR	-40 to 125	LM2588S -ADJ P+	Samples
LM2588T-3.3	ACTIVE	TO-220	NDZ	7	45	TBD	Call TI	Call TI	-40 to 125	LM2588T -3.3 P+	Samples

Orderable Device	Status (1)	Package Type	Package Drawing	Pins	Package Qty	Eco Plan (2)	Lead/Ball Finish	MSL Peak Temp (3)	Op Temp (°C)	Top-Side Markings (4)	Samples
LM2588T-3.3/NOPB	ACTIVE	TO-220	NDZ	7	45	Pb-Free (RoHS Exempt)	CU SN	Level-1-NA-UNLIM	-40 to 125	LM2588T -3.3 P+	Samples
LM2588T-5.0	ACTIVE	TO-220	NDZ	7	45	TBD	Call TI	Call TI	-40 to 125	LM2588T -5.0 P+	Samples
LM2588T-5.0/NOPB	ACTIVE	TO-220	NDZ	7	45	Pb-Free (RoHS Exempt)	CU SN	Level-1-NA-UNLIM	-40 to 125	LM2588T -5.0 P+	Samples
LM2588T-ADJ	ACTIVE	TO-220	NDZ	7	45	TBD	Call TI	Call TI	-40 to 125	LM2588T -ADJ P+	Samples
LM2588T-ADJ/NOPB	ACTIVE	TO-220	NDZ	7	45	Pb-Free (RoHS Exempt)	CU SN	Level-1-NA-UNLIM	-40 to 125	LM2588T -ADJ P+	Samples

(1) The marketing status values are defined as follows:
ACTIVE: Product device recommended for new designs.
LIFEBUY: TI has announced that the device will be discontinued, and a lifetime-buy period is in effect.
NRND: Not recommended for new designs. Device is in production to support existing customers, but TI does not recommend using this part in a new design.
PREVIEW: Device has been announced but is not in production. Samples may or may not be available.
OBSOLETE: TI has discontinued the production of the device.

(2) Eco Plan - The planned eco-friendly classification: Pb-Free (RoHS), Pb-Free (RoHS Exempt), or Green (RoHS & no Sb/Br) - please check http://www.ti.com/productcontent for the latest availability information and additional product content details.
TBD: The Pb-Free/Green conversion plan has not been defined.
Pb-Free (RoHS): TI's terms "Lead-Free" or "Pb-Free" mean semiconductor products that are compatible with the current RoHS requirements for all 6 substances, including the requirement that lead not exceed 0.1% by weight in homogeneous materials. Where designed to be soldered at high temperatures, TI Pb-Free products are suitable for use in specified lead-free processes.
Pb-Free (RoHS Exempt): This component has a RoHS exemption for either 1) lead-based flip-chip solder bumps used between the die and package, or 2) lead-based die adhesive used between the die and leadframe. The component is otherwise considered Pb-Free (RoHS compatible) as defined above.
Green (RoHS & no Sb/Br): TI defines "Green" to mean Pb-Free (RoHS compatible), and free of Bromine (Br) and Antimony (Sb) based flame retardants (Br or Sb do not exceed 0.1% by weight in homogeneous material)

(3) MSL, Peak Temp. -- The Moisture Sensitivity Level rating according to the JEDEC industry standard classifications, and peak solder temperature.

(4) Only one of markings shown within the brackets will appear on the physical device.

Important Information and Disclaimer: The information provided on this page represents TI's knowledge and belief as of the date that it is provided. TI bases its knowledge and belief on information provided by third parties, and makes no representation or warranty as to the accuracy of such information. Efforts are underway to better integrate information from third parties. TI has taken and continues to take reasonable steps to provide representative and accurate information but may not have conducted destructive testing or chemical analysis on incoming materials and chemicals. TI and TI suppliers consider certain information to be proprietary, and thus CAS numbers and other limited information may not be available for release.

In no event shall TI's liability arising out of such information exceed the total purchase price of the TI part(s) at issue in this document sold by TI to Customer on an annual basis.

TAPE AND REEL INFORMATION

REEL DIMENSIONS

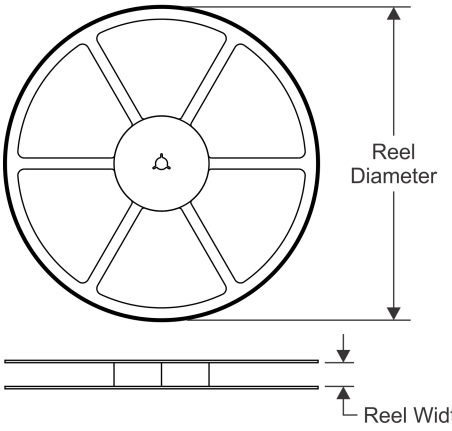

TAPE DIMENSIONS

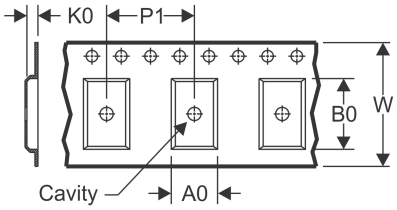

A0	Dimension designed to accommodate the component width
B0	Dimension designed to accommodate the component length
K0	Dimension designed to accommodate the component thickness
W	Overall width of the carrier tape
P1	Pitch between successive cavity centers

QUADRANT ASSIGNMENTS FOR PIN 1 ORIENTATION IN TAPE

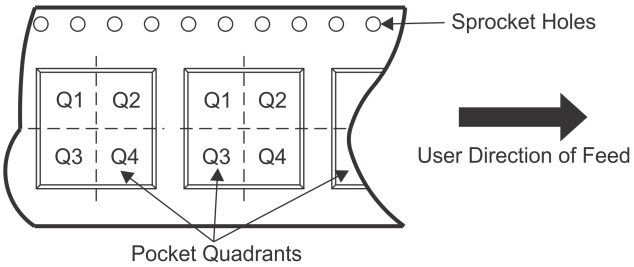

*All dimensions are nominal

Device	Package Type	Package Drawing	Pins	SPQ	Reel Diameter (mm)	Reel Width W1 (mm)	A0 (mm)	B0 (mm)	K0 (mm)	P1 (mm)	W (mm)	Pin1 Quadrant
LM2588SX-12	DDPAK	KTW	7	500	330.0	24.4	10.75	14.85	5.0	16.0	24.0	Q2
LM2588SX-12/NOPB	DDPAK	KTW	7	500	330.0	24.4	10.75	14.85	5.0	16.0	24.0	Q2
LM2588SX-3.3	DDPAK	KTW	7	500	330.0	24.4	10.75	14.85	5.0	16.0	24.0	Q2
LM2588SX-3.3/NOPB	DDPAK	KTW	7	500	330.0	24.4	10.75	14.85	5.0	16.0	24.0	Q2
LM2588SX-5.0	DDPAK	KTW	7	500	330.0	24.4	10.75	14.85	5.0	16.0	24.0	Q2
LM2588SX-5.0/NOPB	DDPAK	KTW	7	500	330.0	24.4	10.75	14.85	5.0	16.0	24.0	Q2
LM2588SX-ADJ	DDPAK	KTW	7	500	330.0	24.4	10.75	14.85	5.0	16.0	24.0	Q2
LM2588SX-ADJ/NOPB	DDPAK	KTW	7	500	330.0	24.4	10.75	14.85	5.0	16.0	24.0	Q2

TAPE AND REEL BOX DIMENSIONS

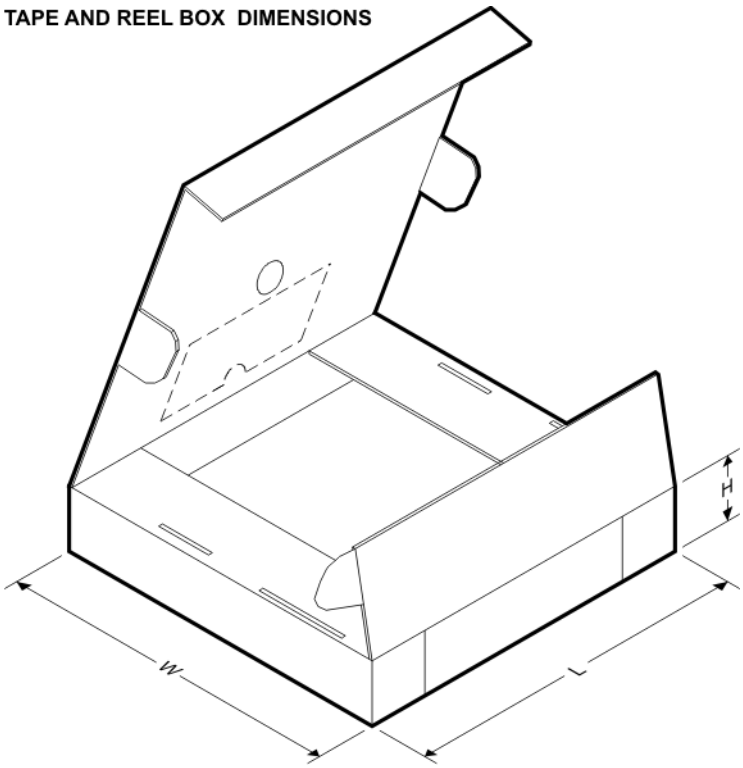

*All dimensions are nominal

Device	Package Type	Package Drawing	Pins	SPQ	Length (mm)	Width (mm)	Height (mm)
LM2588SX-12	DDPAK	KTW	7	500	358.0	343.0	63.0
LM2588SX-12/NOPB	DDPAK	KTW	7	500	358.0	343.0	63.0
LM2588SX-3.3	DDPAK	KTW	7	500	358.0	343.0	63.0
LM2588SX-3.3/NOPB	DDPAK	KTW	7	500	358.0	343.0	63.0
LM2588SX-5.0	DDPAK	KTW	7	500	358.0	343.0	63.0
LM2588SX-5.0/NOPB	DDPAK	KTW	7	500	358.0	343.0	63.0
LM2588SX-ADJ	DDPAK	KTW	7	500	358.0	343.0	63.0
LM2588SX-ADJ/NOPB	DDPAK	KTW	7	500	358.0	343.0	63.0

NDZ0007B

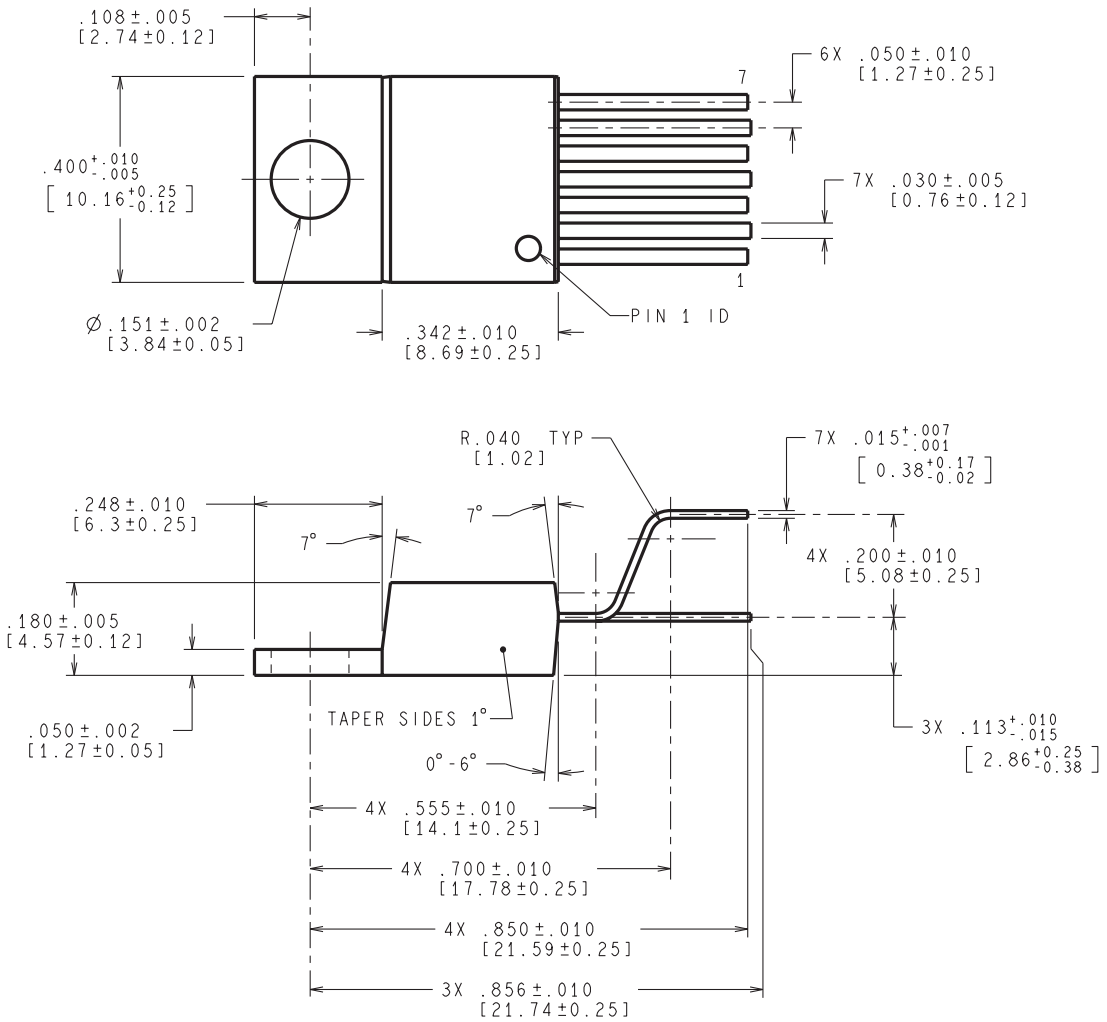

CONTROLING DIMENSIONS IS INCH
VALUES IN [ ] ARE MILLIMETERS

TA07B (Rev E)

KTW0007B

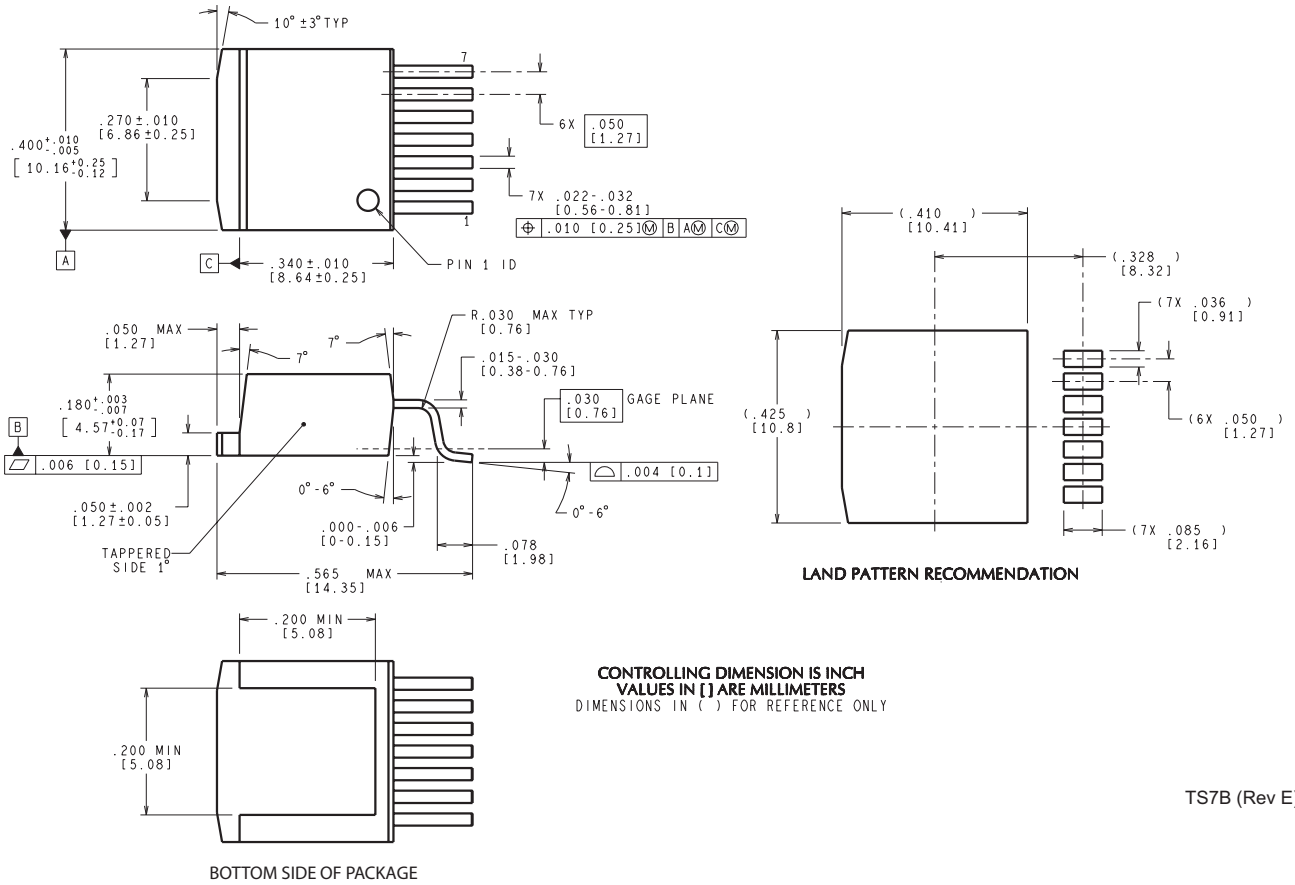
10° ±3° TYP
7
.270±.010
[6.86±0.25]
.400+.010 -.005
[10.16+0.25 -0.12]
6X .050 [1.27]
7X .022-.032
[0.56-0.81]
.010 [0.25] M B A M C M
1
A
C
.340±.010
[8.64±0.25]
PIN 1 ID
.050 MAX
[1.27]
7°
7°
R.030 MAX TYP
[0.76]
.015-.030
[0.38-0.76]
.030 [0.76] GAGE PLANE
.180+.003 -.007
[4.57+0.07 -0.17]
B
.006 [0.15]
.004 [0.1]
0°-6°
0°-6°
.050±.002
[1.27±0.05]
.000-.006
[0-0.15]
.078
[1.98]
TAPPERED
SIDE 1
.565 MAX
[14.35]
(.410)
[10.41]
(.328)
[8.32]
(7X .036)
[0.91]
(.425)
[10.8]
(6X .050)
[1.27]
(7X .085)
[2.16]
LAND PATTERN RECOMMENDATION
.200 MIN
[5.08]
.200 MIN
[5.08]
BOTTOM SIDE OF PACKAGE
CONTROLLING DIMENSION IS INCH
VALUES IN [ ] ARE MILLIMETERS
DIMENSIONS IN ( ) FOR REFERENCE ONLY
TS7B (Rev E)

IMPORTANT NOTICE

Texas Instruments Incorporated and its subsidiaries (TI) reserve the right to make corrections, enhancements, improvements and other changes to its semiconductor products and services per JESD46, latest issue, and to discontinue any product or service per JESD48, latest issue. Buyers should obtain the latest relevant information before placing orders and should verify that such information is current and complete. All semiconductor products (also referred to herein as “components”) are sold subject to TI’s terms and conditions of sale supplied at the time of order acknowledgment.

TI warrants performance of its components to the specifications applicable at the time of sale, in accordance with the warranty in TI’s terms and conditions of sale of semiconductor products. Testing and other quality control techniques are used to the extent TI deems necessary to support this warranty. Except where mandated by applicable law, testing of all parameters of each component is not necessarily performed.

TI assumes no liability for applications assistance or the design of Buyers’ products. Buyers are responsible for their products and applications using TI components. To minimize the risks associated with Buyers’ products and applications, Buyers should provide adequate design and operating safeguards.

TI does not warrant or represent that any license, either express or implied, is granted under any patent right, copyright, mask work right, or other intellectual property right relating to any combination, machine, or process in which TI components or services are used. Information published by TI regarding third-party products or services does not constitute a license to use such products or services or a warranty or endorsement thereof. Use of such information may require a license from a third party under the patents or other intellectual property of the third party, or a license from TI under the patents or other intellectual property of TI.

Reproduction of significant portions of TI information in TI data books or data sheets is permissible only if reproduction is without alteration and is accompanied by all associated warranties, conditions, limitations, and notices. TI is not responsible or liable for such altered documentation. Information of third parties may be subject to additional restrictions.

Resale of TI components or services with statements different from or beyond the parameters stated by TI for that component or service voids all express and any implied warranties for the associated TI component or service and is an unfair and deceptive business practice. TI is not responsible or liable for any such statements.

Buyer acknowledges and agrees that it is solely responsible for compliance with all legal, regulatory and safety-related requirements concerning its products, and any use of TI components in its applications, notwithstanding any applications-related information or support that may be provided by TI. Buyer represents and agrees that it has all the necessary expertise to create and implement safeguards which anticipate dangerous consequences of failures, monitor failures and their consequences, lessen the likelihood of failures that might cause harm and take appropriate remedial actions. Buyer will fully indemnify TI and its representatives against any damages arising out of the use of any TI components in safety-critical applications.

In some cases, TI components may be promoted specifically to facilitate safety-related applications. With such components, TI’s goal is to help enable customers to design and create their own end-product solutions that meet applicable functional safety standards and requirements. Nonetheless, such components are subject to these terms.

No TI components are authorized for use in FDA Class III (or similar life-critical medical equipment) unless authorized officers of the parties have executed a special agreement specifically governing such use.

Only those TI components which TI has specifically designated as military grade or “enhanced plastic” are designed and intended for use in military/aerospace applications or environments. Buyer acknowledges and agrees that any military or aerospace use of TI components which have ***not*** been so designated is solely at the Buyer's risk, and that Buyer is solely responsible for compliance with all legal and regulatory requirements in connection with such use.

TI has specifically designated certain components as meeting ISO/TS16949 requirements, mainly for automotive use. In any case of use of non-designated products, TI will not be responsible for any failure to meet ISO/TS16949.

Products		**Applications**	
Audio	www.ti.com/audio	Automotive and Transportation	www.ti.com/automotive
Amplifiers	amplifier.ti.com	Communications and Telecom	www.ti.com/communications
Data Converters	dataconverter.ti.com	Computers and Peripherals	www.ti.com/computers
DLP® Products	www.dlp.com	Consumer Electronics	www.ti.com/consumer-apps
DSP	dsp.ti.com	Energy and Lighting	www.ti.com/energy
Clocks and Timers	www.ti.com/clocks	Industrial	www.ti.com/industrial
Interface	interface.ti.com	Medical	www.ti.com/medical
Logic	logic.ti.com	Security	www.ti.com/security
Power Mgmt	power.ti.com	Space, Avionics and Defense	www.ti.com/space-avionics-defense
Microcontrollers	microcontroller.ti.com	Video and Imaging	www.ti.com/video
RFID	www.ti-rfid.com		
OMAP Applications Processors	www.ti.com/omap	**TI E2E Community**	e2e.ti.com
Wireless Connectivity	www.ti.com/wirelessconnectivity		

Mailing Address: Texas Instruments, Post Office Box 655303, Dallas, Texas 75265
Copyright © 2013, Texas Instruments Incorporated