AUDAX INDUSTRIES
2, route de Tours - 72500 Château du Loir
Phone : (33) 2 43 38 42 00 - Fax : (33) 2 43 44 12 02

TW025M2

TWEETER

TW025M2 D04TTP0010
101951Q

Apr.98

TW025 . Textile cavity. 4Ω

- *Critically damped polyester based fabric dome coupled with polyethylene laminate*
- *Vented pole piece with double damping (front + vent)*
- *High impact polymer face plate - small horn load controlling the smooth frequency response*
- *Ultra-light copper clad aluminium wire voice coil with braided wire*
- *Natural felt damped and tuned back chamber*

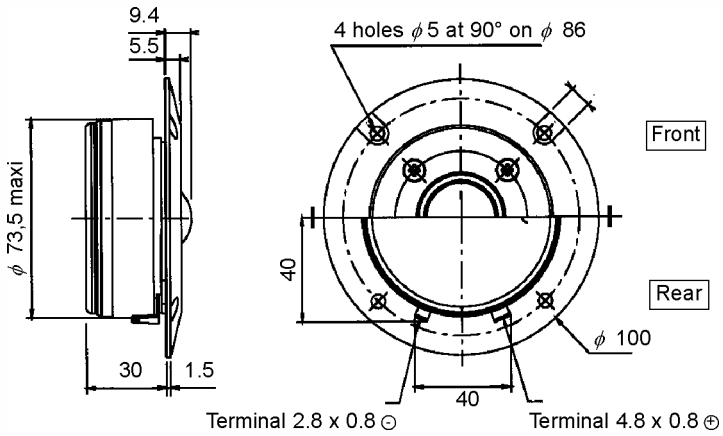

All dimensions in mm

Response Curve

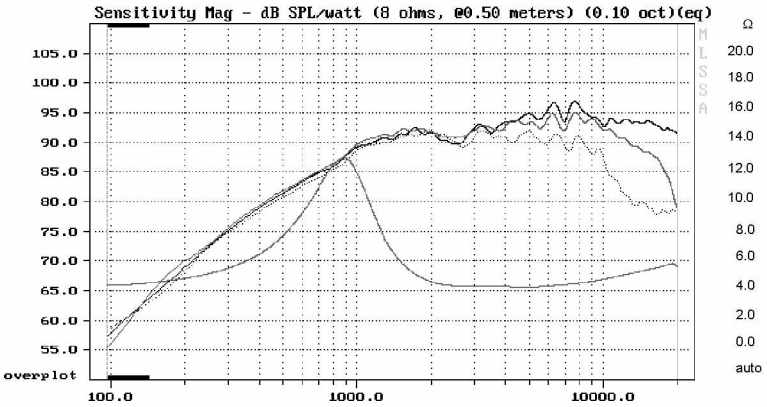

RESPONSE CURVE : on axis
30° off-axis
60° off-axis

IMPEDANCE CURVE

Waterfall

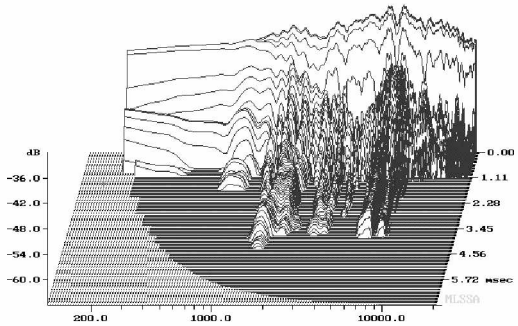

Cumulative Spectral Decay

Log Frequency - Hz

SPECIFICATIONS

Technical characteristics	Symbol	Value	Units
PRIMARY APPLICATION			
Nominal Impedance	Z	4	Ω
Resonance Frequency	Fs	1000	Hz
Nominal Power Handling	P	100	W
Sensitivity (2,83 v/1m)	E	94	dB
VOICE COIL			
Voice Coil Diameter	ϕ	25	mm
Minimum Impedance	Zmin	4,4	Ω
DC Resistance	Re	3,8	Ω
Voice Coil Inductance	Lbm	-	µH
Voice Coil Length	h	1,7	mm
Former	-	Aluminium	-
Number of Layers	n	2	-

MAGNET			
Magnet Dimensions	ϕ x h	72 x 15	mm
Magnet Weight	m	0,24	kg
Flux Density	B	1,5	T
Force Factor	BL	3,1	NA^{-1}
Height of Magnetic Gap	He	1,0	mm
Stray Flux	Fmag	-	Am^{-1}
Linear Excursion	Xmax	± 0,3	mm
PARAMETERS			
Suspension Compliance	Cms	-	mN^{-1}
Mechanical Q Factor	Qms	-	-
Electrical Q Factor	Qes	-	-
Total Q Factor	Qts	-	-
Mechanical Resistance	Rms	-	$kg\ s^{-1}$
Moving Mass	Mms	-	kg
Effective Piston Area	S	$6{,}2.10^{-4}$	m^2
Mass of Speaker	M	0,53	kg

Suggested Applications

Crossover Frequency	Slope	Inductance	Capacitor	Power Handling
Hz	dB / Oct.	mH	µF	W
2000	12	0,36	12	100
3000	6	-	10	80

AUDAX INDUSTRIES

TW025M2

101997A

TWEETER

TW025 . Textile cavity. 4Ω

- *Critically damped polyester based fabric dome coupled with polyethylene laminate*
- *Vented pole piece with double damping (front + vent)*
- *High impact polymer face plate - small horn load controlling the smooth frequency response*
- *Ultra-light copper clad aluminium wire voice coil with braided wire*
- *Natural felt damped and tuned back chamber*

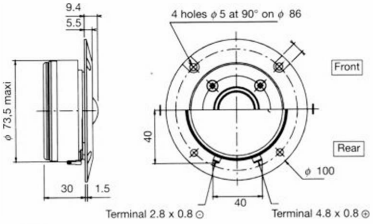

All dimensions in mm

Response Curve

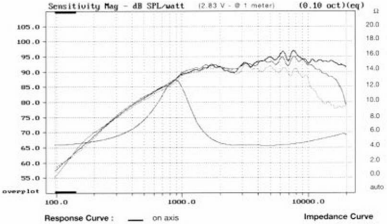

Waterfall

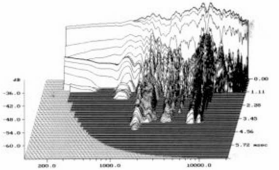

Cumulative Spectral Decay Log Frequency - Hz

SPECIFICATIONS

Technical characteristics	Symbol	Value	Units
PRIMARY APPLICATION			
Nominal Impedance	Z	4	Ω
Resonance Frequency	Fs	1000	Hz
Nominal Power Handling	P	100	W
Sensitivity (2,83 v/1m)	E	94	dB
VOICE COIL			
Voice Coil Diameter	ϕ	25	mm
Minimum Impedance	Zmin	4,4	Ω
DC Resistance	Re	3,8	Ω
Voice Coil Inductance	Lbm	-	µH
Voice Coil Length	h	1,7	mm
Former	-	Aluminium	-
Number of Layers	n	2	-

MAGNET			
Magnet Dimensions	ϕ x h	72 x 15	mm
Magnet Weight	m	245	g
Flux Density	B	1,5	T
Force Factor	BL	3,1	NA⁻¹
Height of Magnetic Gap	He	1,0	mm
Stray Flux	Fmag	-	Am⁻¹
Linear Excursion	Xmax	± 0,3	mm
PARAMETERS			
Suspension Compliance	Cms	-	mN⁻¹
Mechanical Q Factor	Qms	-	-
Electrical Q Factor	Qes	-	-
Total Q Factor	Qts	-	-
Mechanical Resistance	Rms	-	kg s⁻¹
Moving Mass	Mms	-	kg
Effective Piston Area	S	4,91	cm²
Mass of Speaker	M	530	g

Suggested Applications

Crossover Frequency	Slope	Inductance	Capacitor	Power Handling
Hz	dB / Oct.	mH	µF	W
2000	12	0,36	12	100
3000	6	-	10	80